RESTRICTED 31W1-3TP9-21

TM 11-2059

TO ~~16-35 TP 9-5~~

WAR DEPARTMENT TECHNICAL MANUAL

~~31W1-2TP9-1~~

~~AB56132 COURSE~~

~~T-SAT OFFICE CORV~~

TELEPHONE TP-9

RESTRICTED. DISSEMINATION OF RESTRICTED MATTER. No person is entitled solely by virtue of his grade or position to knowledge or possession of classified matter. Such matter is entrusted only to those individuals whose official duties require such knowledge or possession. (See also paragraph 23b, AR 380-5, 15 March 1944.)

WAR DEPARTMENT *9 DECEMBER 1944*

RESTRICTED

WAR DEPARTMENT TECHNICAL MANUAL

TM 11-2059

TELEPHONE TP-9

WAR DEPARTMENT 9 DECEMBER 1944

RESTRICTED. *DISSEMINATION OF RESTRICTED MATTER.* No person is entitled solely by virtue of his grade or position to knowledge or possession of classified matter. Such matter is entrusted only to those individuals whose official duties require such knowledge or possession. (See also paragraph 23*b*, AR 380-5, 15 March 1944.)

WAR DEPARTMENT,
WASHINGTON 25, D. C., 9 December, 1944.

TM 11-2059, Telephone TP-9, is published for the information and guidance of all concerned.

[A. G. 300.7 (21 Jul 44).]

BY ORDER OF THE SECRETARY OF WAR:

G. C. MARSHALL,
Chief of Staff.

OFFICIAL:
J. A. ULIO,
Major General,
The Adjutant General.

DISTRIBUTION:
Armies (5); SvC (5); Depts (5); Def Comds (2); Base Comds (5); T of Opn (5); D (2); I Bn 11 (5); I C 11 (5); PC & S (2) (Cont) (1) (Overseas); PE (2); Chiefs of Tech Sv (2); Arm & Sv Boards (2); Gen & Sp Sv Schs (10); ROTC (5); Sig C Deps (2); Gen O/S SOS Deps (Sig Sec) (2); Sig C Labs (2); Sig C Rep Shops (2).

I Bn 11: T/O and E 11-95.
I C 11: T/O and E 11-97; 11-107; 11-127; 11-237; 11-287; 11-587; 11-592; 11-597.

(For explanation of symbols see FM 21-6.)

TABLE OF CONTENTS

SECTION		Paragraph	Page
I.	Description		
	General	1	1
	List of component parts	2	3
II.	Installation and operation.		
	Unpacking	3	5
	Preparation for use	4	5
	Installation	5	7
	Operation	6	7
III.	Functioning of parts.		
	Theoretical considerations	7	7
	Circuit features	8	10
IV.	Maintenance.		
	Inspection	9	15
	Servicing	10	15
	Replacement of parts	11	17
	Adjustments	12	20
	Lubrication	13	22
	Moistureproofing and fungiproofing	14	24
	Trouble-shooting procedure	15	26
	Trouble-shooting chart	16	28
V.	Supplementary data.		
	Maintenance parts list	17	33
	Vacuum tube socket wiring diagram	18	68
	Point-to-point voltage measurements	19	69
	Point-to-point resistance measurements	20	70
	Resistor color code	21	72
	Capacitor color code	22	73

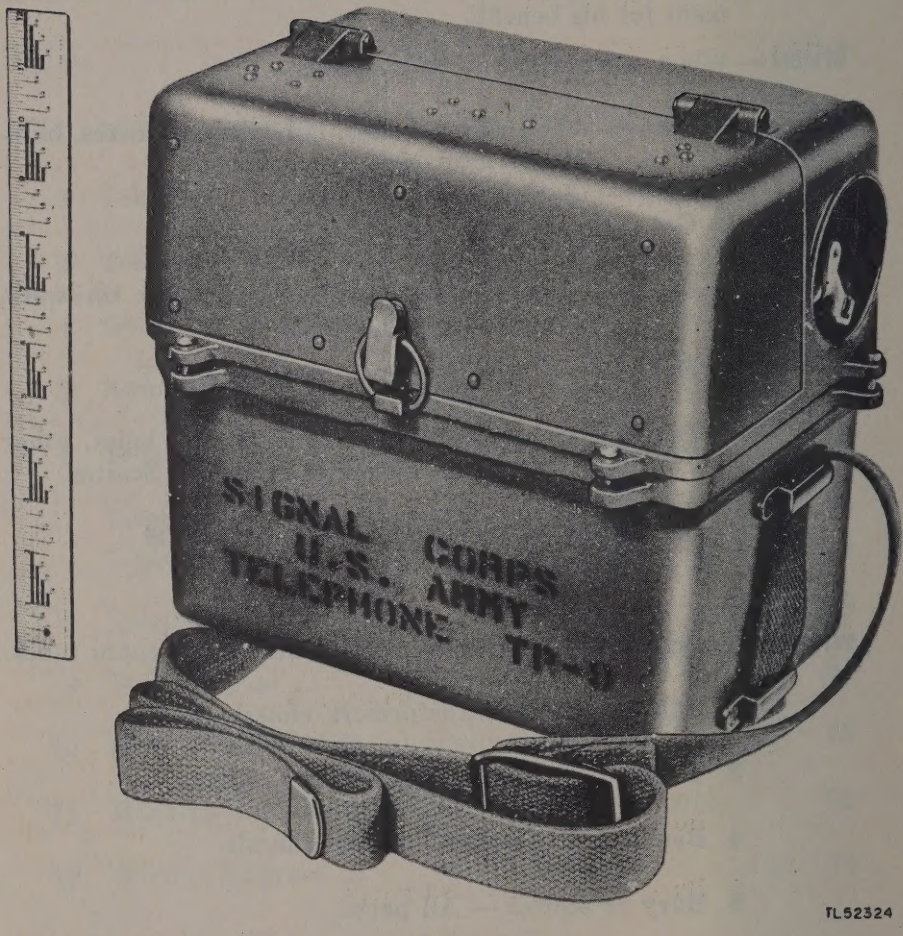

Figure 1. Telephone TP-9.

SECTION I

DESCRIPTION

1. GENERAL.

a. Telephone TP-9 (fig. 1) is a portable telephone set designed to provide communication over greater distances than those obtained with ordinary local battery sets. This is made possible by the use of vacuum-tube amplifiers in both the transmitting and receiving circuits. Power is supplied by batteries mounted inside the instrument. Provision is made so that the telephone may also be used without the amplifiers as a local battery set. When using the amplifiers, transmission may be effected in only one direction at a time. In this case, close cooperation of personnel using the equipment is necessary for efficient operation.

NOTE: This equipment contains vacuum tubes and must be handled with the care given a fine radio set.

b. Telephone TP-9 is primarily intended for use at the terminals and at intermediate points between terminals of a two-wire line composed of field Wire W-110-B. When used in this way, and noise and crosstalk conditions permit, the telephone approximately doubles the transmission range obtained with ordinary local battery sets. The telephone may be used with other facilities, and in this case the transmission range depends on the characteristics of the line and weather conditions. Satisfactory communication over lines whose attenuation does not exceed approximately 60 to 65 db can be obtained if noise, crosstalk, and other interference conditions permit.

c. Telephone TP-9 is provided with a bell for audible signaling and with a visual signal for noiseless signaling. A switch is provided to select either type of signaling method. The visual signal is designed so that it may be used in darkness. When ringing current is received, the signal leaf flies up, and the operator can note its position by passing his hand over the leaf.

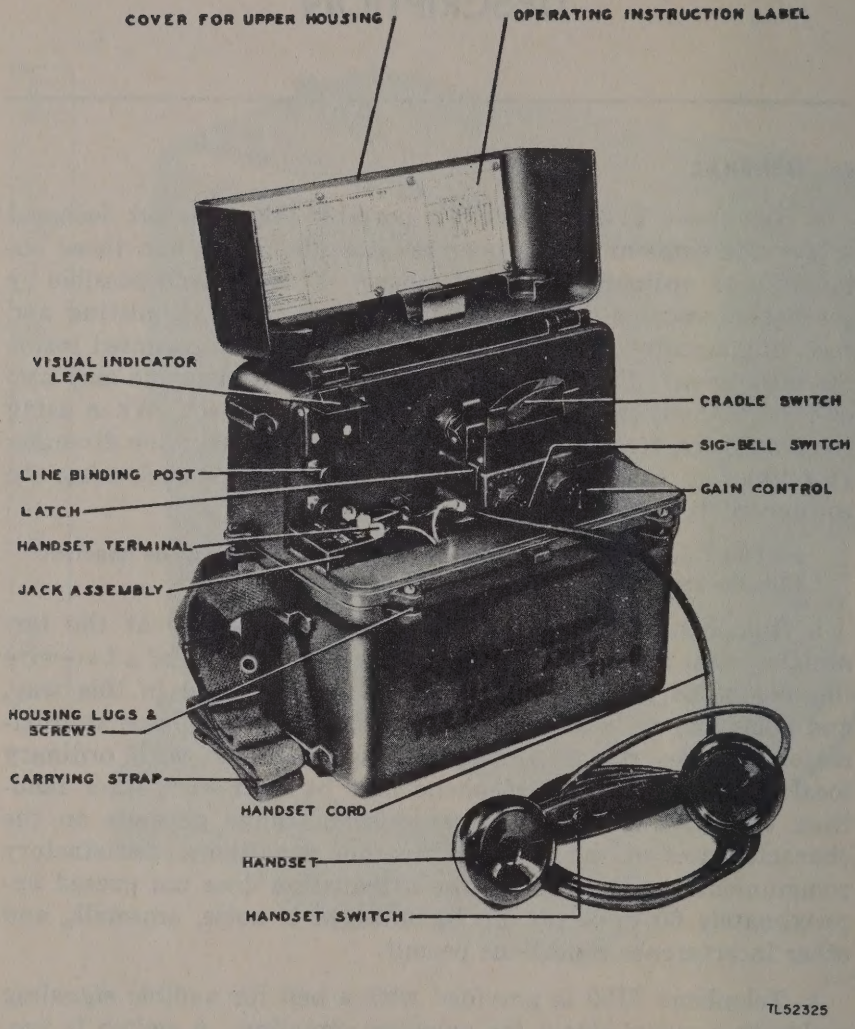

Figure 2. Telephone TP-9, upper housing open.

d. The telephone consists of a cast aluminum chassis 12½ inches long by 7¾ inches wide by 10¾ inches high. It weighs approximately 19 pounds less batteries. The chassis consists of an upper and lower compartment and houses all the equipment necessary for operation. The lower housing encloses the amplifier equipment and batteries. The upper housing encloses the generator and ringer equipment. A hinged cover is attached to the upper housing and in its lowered position covers the handset and control equipment mounted at the front of the set (fig. 2). The generator crank extends through the side of the upper housing and folds into a recess provided for this purpose. A head and chest set can be used with the telephone instead of the handset. When assembled, the telephone set is made waterproof by a composition gasket separating the upper and lower housings and by gaskets protecting the openings for the generator crank, binding posts, switches, and controls.

e. Power for operating the telephone is derived from a battery complement consisting of one BA-27 (4½-volt), one BA-65 (1½-volt), and three BA-2 (22½-volt) dry-cell batteries, mounted in a hinged frame at the bottom of the unit. The drain on the 1½-volt filament supply Battery BA-65 is about 200 ma. The drain on the 4½-volt transmitter and relay Battery BA-27 is approximately 50 ma. The total net drain on the three 22½-volt Batteries BA-2 is about 5½ ma. Under normal conditions of intermittent operation, the batteries should last about 3 or 4 weeks. However, this period will vary with climatic and operating conditions.

2. LIST OF COMPONENT PARTS.

Quantity	Article	Shipping size (in.)	Approximate weight (lb)
1	Telephone TP-9	21x14½x24¾ (2 units)	19 (each unit)
2	Technical Manual TM 11-2059	—	—
3	Battery BA-2	—	1
1	Battery BA-27	—	½
1	Battery BA-65	—	1

Note: Batteries must be ordered separately.

947407 O - 51 - 2

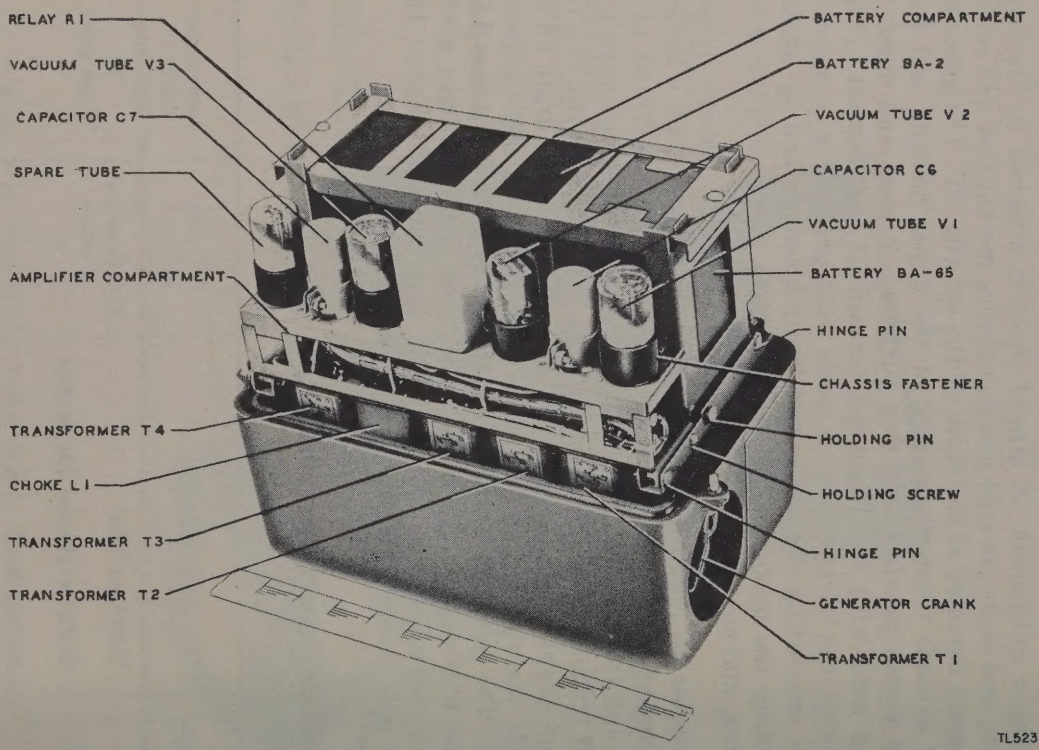

Figure 3. Telephone TP-9, lower housing removed.

SECTION II
INSTALLATION AND OPERATION

3. UNPACKING.

The individual unit is packed and shipped in containers which are moistureproof.

a. Remove the outer corrugated container.

b. Remove the foil barrier.

c. Remove the inner corrugated container.

4. PREPARATION FOR USE.

a. Unfasten the four screws which hold the upper and lower housings together. Turn the equipment upside down and separate the housings.

b. Unfasten the two battery clamping-frame screws and remove both battery clamping frames.

c. Install Battery BA-27 as shown in figure 4.

d. Replace the center battery clamping frame.

e. Install three Batteries BA-2 and one Battery BA-65 as shown in figure 4.

f. Replace the other battery clamping frame and tighten the battery-frame screws.

g. Disengage the two battery-frame locking pins at the ends of the compartment and swing the compartment outward.

h. Connect the batteries as shown in figure 4.

NOTE: Battery BA-65 has a two-prong connector-plug receptacle. To insure correct polarity, be sure that the larger pin of the plug is inserted in the larger hole of the battery receptacle.

CAUTION: When not using the telephone, lock the cradle switch in the down position or current will be drawn from the batteries. Lock handset cradle switch by pushing the cradle switch down and moving the latch located beneath the cradle switch to the left.

DIRECTIONS FOR OPERATING TELEPHONE TP-9

1. Preparation for Use

a. Unfasten the four screws which hold the upper and lower housings together. Turn equipment upside down and separate housings.

b. Unfasten the two battery clamping frame screws and remove both battery clamping frames.

c. Install Battery BA-27 as shown in the diagram to the right.

d. Replace the center battery clamping frame.

e. Install three Battery BA-2 and one Battery BA-65 as shown in the diagram.

f. Replace the other battery clamping frame and right-on battery frame screws.

g. Disengage the two battery frame locking pins at the ends of the compartment and swing the compartment outward.

h. Connect batteries as shown in the diagram.

Note: Battery BA-65 has a two-prong connector plug receptacle. To insure correct polarity, make sure that the larger pin of the plug is inserted in the larger hole of the battery receptacle.

Caution. When not using instrument, lock cradle switch in the down position, otherwise current will be drawn from the batteries. Lock handset cradle switch by pushing cradle switch down and moving latch, located beneath cradle switch, to the left.

i. Put housings together and fasten screws.

j. Test amplifiers as follows:

1. Remove handset from cradle.
2. Turn GAIN control to maximum clockwise position.
3. Release cradle switch lever. Push latch to the right to release cradle switch lever. The cradle switch lever should rise.
4. Place telephone receiver to ear and tap side of housing. A slight amount of microphonic noise should be heard in receiver.
5. Press handset switch and blow into transmitter. Side-tone should be heard in receiver.

2. Installation

a. To use Telephone TP-9 at the end of a line, connect line wires to binding posts.

b. To use Telephone TP-9 at intermediate points, bridge the telephone across the line without interrupting the continuity of the circuit. Strip insulation from line wires and make loop connections to binding posts. DO NOT CUT LINE WIRES.

3. Operation

a. Signaling

1. To signal another telephone on the line, turn generator crank briskly in a clockwise direction.

2. To receive a signal, select the desired type of signal as follows:

a. For an audible signal, set SIG. BELL switch to BELL.

b. For a visual signal, set SIG. BELL switch to SIG.

NOTE. RESTORE VISUAL SIGNAL LEAF MANUALLY IMMEDIATELY AFTER EACH RECEIVED SIGNAL SO THAT BREAK IN SIGNALS FROM ANOTHER STATION CAN BE RECEIVED.

b. Conversation

1. Without amplification

a. Remove handset from cradle. Lock handset cradle switch by pushing cradle switch down and moving latch to the left.

b. To listen, place receiver to ear.

c. To talk, operate butterfly switch in handset.

2. With amplification

a. Turn GAIN control to about mid-position.

b. Remove handset from cradle. Release cradle switch by pushing latch to the right, allowing cradle lever to rise.

c. To Talk.

Note: Where Telephone TP-9 is used with amplifiers, it is not possible to talk and listen simultaneously. Unusually close cooperation between talker and listener is necessary for efficient operation.

1. Send ringing signal to establish communication with the other station.

2. Wait for the other station to answer, keeping handset butterfly switch in released position.

3. When the other station answers, operate handset butterfly switch and talk.

d. To listen, keep butterfly switch on handset in released position.

Note. During conversation, adjust GAIN control until best volume is obtained.

e. To interrupt talker at another station:

1. Transmit a ring by turning generator crank. This will operate visual signal or bell at the other station.

2. Upon receiving the signal, the person talking from the other station must immediately stop talking and release handset butterfly switch.

3. As soon as the other station has stopped talking, operate handset butterfly switch and start talking.

4. Shipping and Storage

a. Remove batteries from battery compartment if Telephone TP-9 is to be left idle for more than a few days, to put in storage, or is packed for shipment.

b. Under any of the conditions specified in "a" above, lock the cradle switch by pushing the cradle switch down and moving latch to the left.

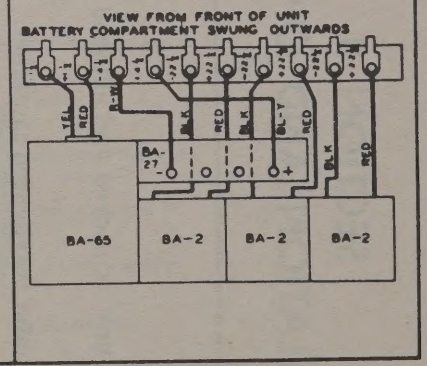

TL52327

Figure 4. Operating instructions label.

i. Put the housing together and fasten the screws.

CAUTION: Make sure that the gasket separating the upper and lower housings is free from dirt and grit, and that there are no nicks in the V-edged facing on the lower housing.

j. Test the amplifiers as follows:

(1) Remove the handset from the cradle.

(2) Turn the GAIN control to the maximum clockwise position.

(3) Release the cradle-switch lever by pushing the latch to the right. The cradle-switch lever should rise.

(4) Place the telephone receiver to the ear and tap the side of the housing. Microphonic noise should be heard in the receiver. Press the handset switch and blow into the transmitter. Side-tone should be heard in the receiver.

5. INSTALLATION.

a. To use Telephone TP-9 at the end of a line, connect the line wires to the binding posts.

b. To use Telephone TP-9 at intermediate points, bridge the telephone across the line without interrupting the continuity of the circuit. Strip the insulation from the line wires and make a loop connection to the binding posts. *Do not cut the line wires.*

6. OPERATION

a. Signaling. To signal another telephone on the line, turn the generator crank briskly in a clockwise direction. To receive a signal, select the desired type of signal as follows. For an audible signal, set the SIG-BELL switch to BELL. For a visual signal, set the SIG-BELL switch to SIG.

b. Conversation. (1) WITHOUT AMPLIFICATION.

(a) Remove the handset from the cradle. Lock the handset cradle switch by pushing the cradle switch down and moving the latch to the left.

(b) To talk, operate the handset switch. To listen, release the switch.

(2) WITH AMPLIFICATION.

(a) Turn the GAIN control to about mid-position.

(b) Remove the handset from the cradle. Release the cradle switch by pushing the latch to the right, allowing the cradle lever to rise.

(c) To talk, send a ringing signal to establish communication with the other station. Wait for the other station to answer, *keeping the handset butterfly switch in the released position.* After the other station answers, operate the handset butterfly switch and talk.

NOTE: When Telephone TP-9 is used with amplifiers, it is not possible to talk and listen simultaneously. Close cooperation between the talker and listener is necessary for efficient operation.

(d) To listen, keep the butterfly switch on the handset in the released position. During conversation, adjust the GAIN control until the best volume is obtained.

(e) To interrupt the talker at the other station, transmit a ringing signal by turning the generator crank. This will operate the bell or visual signal at the other station. Upon receiving the signal, the person talking from the other station must immediately stop talking and release the handset butterfly switch. As soon as the other station has stopped talking, operate the handset switch and start talking.

NOTE: When Telephone TP-9 is used on a circuit which is connected to a switchboard, a break-in signal may be assumed to be a ring-off signal by the switchboard operator. In this case it will be necessary to wait for the operator's challenge before continuing the conversation.

SECTION III
FUNCTIONING OF PARTS

7. THEORETICAL CONSIDERATIONS.

a. The distance over which satisfactory telephone communication can be accomplished is limited by the attenuation of the line and by noise, crosstalk, and other interference present in the circuit. To extend the communication range it becomes necessary to use transmitting amplifiers which will impress stronger signals on the line, and thereby provide a more favorable signal-to-noise ratio. To compensate for the losses in the line, it is necessary to provide amplifiers in the receiving circuit. The receiving amplifiers will increase the communication range as long as a good signal-to-noise ratio is maintained.

b. Telephone TP-9 differs from other telephones in that amplifiers are self-contained in the telephone set; the transmitting circuit uses one stage of amplification, while the receiving circuit uses two stages of amplification. To provide a more favorable signal-to-noise ratio, the speech energy originating at the transmitter is amplified and sent out on the line at a comparatively high level (15 dbm). The speech energy received at the telephone terminals is amplified through two stages of amplification to provide a maximum gain of approximately 55 db.

c. Losses caused by the capacitive effects in the line increase at higher frequencies. To overcome these losses, the receiving amplifier of Telephone TP-9 is designed to provide greater amplification at higher voice frequencies (fig. 5). In this way an equalizing action is obtained which results in a satisfactory over-all frequency-response characteristic.

d. Transmission of speech energy from both ends of the line simultaneously is not possible with Telephone TP-9 when using the amplifier, because the coupling of energy between the transmitter and the home receiving amplifier would cause oscillation, and make conversation unintelligible. A relay in the set makes the receiving circuit inoperative during transmission, and makes the transmitting circuit inoperative when speech is being received.

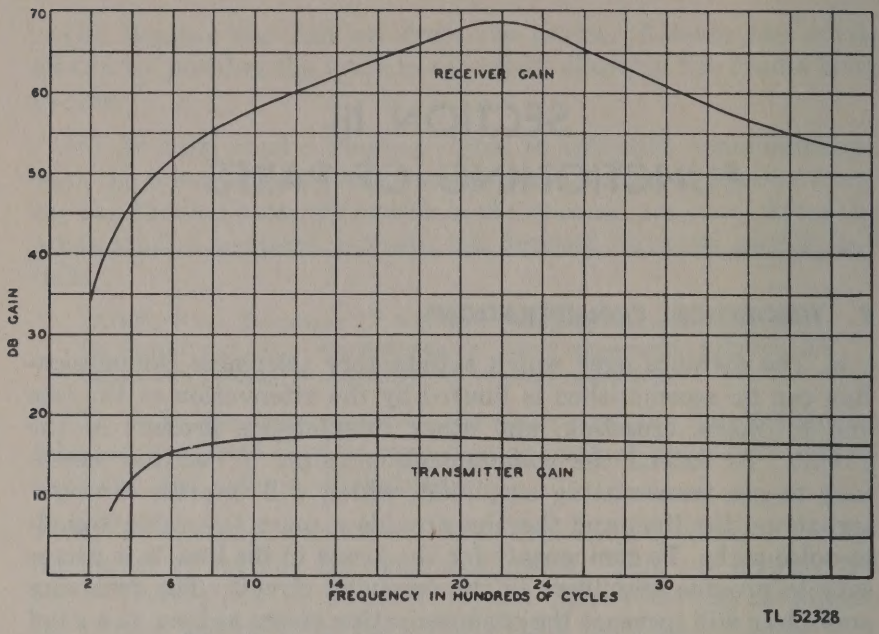

Figure 5. Amplifier gain characteristics.

8. CIRCUIT FEATURES.

The schematic diagram of Telephone TP-9 (fig. 6) shows the circuit with the handset off the cradle and the cradle lock released. This places the circuit in the position to receive incoming speech signals.

a. Circuit with Amplification. (1) RECEIVING CIRCUIT.

(a) With the handset switch released for listening and the cradle switch lever up, relay K1 is not energized. The transmitting circuit is made inoperative by a short circuit across the primary winding 1-2 of the transmitting output transformer T2 through contacts 2-3 of relay K1. This condition exists as long as the handset switch is released.

(b) Incoming speech currents at the line terminals of the telephone set flow through capacitor C-5B, winding 1-2 of transformer T3, and winding 3-4 of transformer T2. The energy induced in winding 1-2 of transformer T2 is short-circuited through contacts 2-3 of relay K1. The energy induced in the secondary winding 3-4 of transformer T3 passes to the grid of the first amplifier tube V2 through the GAIN potentiometer R12 and the grid resistor R8. Potentiometer R12 controls the gain of the receiving amplifier by varying the loss in the input circuit of tube V2.

(c) The network consisting of choke L1 and its capacitor and resistor form the load impedance of tube V2. The parallel circuit formed by choke L1 and the capacitor has a resonant frequency of about 2,000 cycles, and at this point the first stage amplifier has its maximum gain. On either side of this frequency, the gain will decrease as shown in figure 5. This design provides compensation for the line losses over the essential voice frequency band width.

(d) The amplified signals from the first stage are coupled to the grid of tube V3 through capacitor C4. The signals are further amplified by tube V3, and are transformer-coupled to the handset receiver by transformer T4. The primary winding 1-2 of the transformer forms the load impedance for tube V3. The output signals induced in winding 4-5 of the transformer are fed from terminal 4 through contacts 9-7 of cradle switch S1 to terminal R of the handset, and from terminal 5 to terminal C of the handset.

(e) The power supply for the receiving amplifier consists of a 1½-volt Battery BA-65 which supplies filament voltage to the tubes, and three 22½-volt Batteries BA-2 which supply plate voltage to the tubes. The negative side of the batteries is grounded through contacts 1-11-12 of switch S1.

NOTE: The term *ground* applies to a common return point on the terminal strip in the amplifier chassis (fig. 7). All parts in the telephone are electrically insulated from the housing so that the circuits will not be earth-grounded when the telephone is placed on the ground.

(2) TRANSMITTING CIRCUIT.

(a) When the handset switch is operated and the cradle-switch lever is up, current for energizing the transmitter is fed from the positive side of Battery BA-27 through the handset (HS) switch, transmitter (T), winding 1-5 of relay K1, and winding 3-2 of transformer T1 to the negative side of Battery BA-27. Relay K1 closes its contacts (3-4), and removes the short circuit from winding 1-2 of transformer T2. Contacts 3-4 of the relay apply positive battery directly to the plate of the first receiving amplifier tube V2, thus short-circuiting the load impedance network and making the receiving amplifier inoperative. This condition exists as long as the handset switch is held operated.

(b) Speech currents originating in the transmitter (T) flow through winding 2-3 of the input transformer T1 and are in-

947407 O - 51 - 3

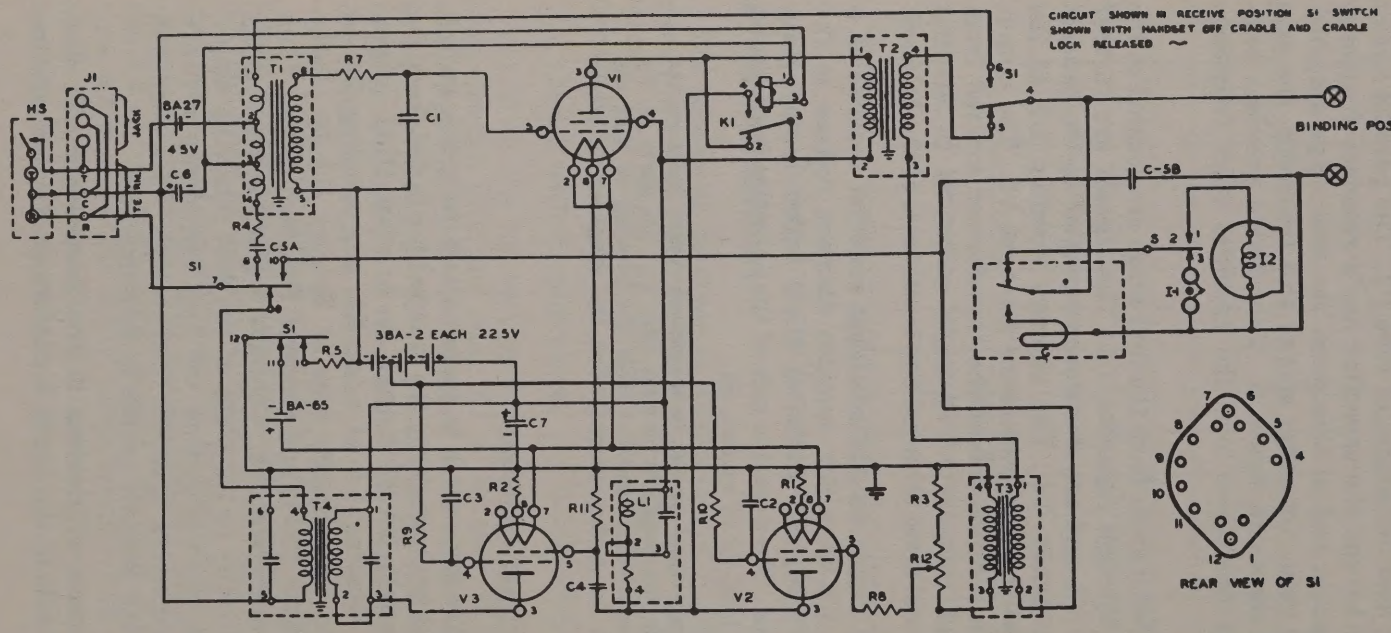
CIRCUIT SHOWN IN RECEIVE POSITION S1 SWITCH SHOWN WITH HANDSET OFF CRADLE AND CRADLE LOCK RELEASED
BINDING POSTS
C-5B
3BA-2 EACH 22.5V
BA-65
45V
REAR VIEW OF S1

REF. NO	DESCRIPTION
C1	CAPACITOR .00047 MF ± 20% 500 WVDC
C2	CAPACITOR .001 MF ± 20% 500 WVDC
C3	CAPACITOR .0047 MF ± 20% 500 WVDC
C4	CAPACITOR .01 MF ± 20% 300 W VDC
C5A, C5B	CAPACITOR - 2 SECT., .3 M F., ±10% X .5 MF., + 20% -10% 500 WVDC
C6	CAPACITOR 10 MF + 50% -10%, 25 WVDC
C7	CAPACITOR 18 MF + 50% -10%, 150 WVDC
R1	RESISTOR 4 Ω ± 10%, ½ W.
R2	RESISTOR 4 Ω ± 10% ½ W.
R3	RESISTOR 220 Ω ± 10% ½ W
R4	RESISTOR 330 Ω ± 10% ½ W

REF. NO.	DESCRIPTION
R5	RESISTOR 1000 Ω ± 10% ½ W.
R7	RESISTOR 56000 Ω ± 10% ½ W
R8	RESISTOR 150 000 Ω ± 10% ½ W
R9	RESISTOR 270 000 Ω ± 10% V2 W
R10	RESISTOR 470 000 Ω ± 10% V2 W
R11	RESISTOR 470 000 Ω ± 10% V2 W
R12	RESISTOR GAIN CONTROL 250 000 Ω
K1	RELAY 50 OHMS
T1	TRANSFORMER TRANSMITTER INPUT
T2	TRANSFORMER TRANSMITTER OUTPUT
T3	TRANSFORMER RECEIVER INPUT
T4	TRANSFORMER RECEIVER OUTPUT

REF. NO	DESCRIPTION
L1	NETWORK INTERSTAGE COUPLING, 8-8 M
S1	SWITCH - ROTARY HANDSET CRADLE
S2	SWITCH - ROTARY SIG. SELECTOR
HS	HANDSET TS - 9
G	GENERATOR GN 38-B
I1	RINGER MC - 131
I2	COILS - VISUAL SIGNAL
V1	VACUUM TUBE JAN. 3Q5 - GT
V2	VACUUM TUBE JAN. 3Q5 GT
V3	VACUUM TUBE JAN. 3Q5 GT
J1	JACK ASS'Y 488008 A/20

TL 52329

Figure 6. Schematic diagram.

duced in the secondary winding 5-6. From the secondary winding of the transformer the speech currents are impressed on the grid of the transmitting amplifier tube V1. The primary winding 1-2 of transformer T2 forms the load impedance for tube V1. The output from the transmitting amplifier is induced in secondary winding 3-4 of the transformer. The signals are fed to the line from terminal 4 through contacts 5-4 of cradle switch S1, and from terminal 3 through winding 1-2 of transformer T3 and capacitor C-5B. Although the energy induced in winding 3-4 of transformer T3 is supplied to the grid of tube V2, the tube has been made inoperative by the operation of relay K1 (par. 8a. (2) (a)).

(c) When the telephone is being used with amplification, and the handset switch is closed, sidetone is heard in the receiver. Since the transmitting and receiving amplifiers employ a common plate voltage supply, the internal voltage drop in the battery is used to provide sidetone in the receiver. The voltage drop in the battery caused by the change in current in the transmitting amplifier appears at the plate (pin 3) of the first amplifier tube V2. These signals are amplified by the second amplifier tube V3, and are applied to the receiver through the output transformer T4 and contacts 9-7 of switch S-1. The bypass capacitor C7 controls the amount of sidetone applied to the receiver.

b. Circuit without Amplification. When the telephone is to be used without amplification as a local battery set, the cradle-switch lever is locked down. This action closes the following contacts of switch S1: 4-6 in the output circuit; 7-8-10 in the receiving circuit. Contacts 1-11-12 are opened, thus disconnecting the power supply from the amplifier tubes.

(1) RECEIVING CIRCUIT. Incoming speech signals at the line terminals of the telephone flow through contacts 4-8 of cradle switch S1, winding 1-3 of transformer T1, and capacitor C6 to terminal C of the handset. From the receiver in the handset, the currents flow through contacts 7-10 of switch S1 and capacitor C-5B back to the line.

(2) TRANSMITTING CIRCUIT.

(a) When the handset switch is closed, a complete circuit for Battery BA-27 is formed through winding 2-3 of transformer T1 and winding 1-5 of relay K1. Speech currents from the transmitter are induced in windings 2-1 and 3-4 of Transformer T1. They are applied to the line from terminal 1 of the transformer through contacts 6-4 of switch S1, and from terminal 4 through

resistor R4, capacitor C5A, contacts 8-10 of switch S1, and capacitor C-5B.

(b) When the telephone is being used without amplification, sidetone is heard in the receiver. The circuit for the sidetone voltage is as follows: transmitter currents are induced in winding 3-4 of transformer T1. These currents flow to the receiver from terminal 3 through capacitor C6, and from terminal 4 through resistor R4, capacitor C5A, and contacts 8-7 of switch S1.

c. Signaling. When the SIG-BELL switch S2 is in the BELL position, ringer MC-131 is connected through the generator switch across the line. When switch S2 is in the SIG position, the visual signal is connected across the line through the generator switch. The ringer and the visual signal both offer high impedance to voice-frequency currents and low impedance to the low-frequency signaling currents.

SECTION IV
MAINTENANCE

NOTE: Failure or unsatisfactory performance of equipment used by Army Ground Forces and Army Service Forces will be reported on W.D., A.G.O. Form No. 468 (Unsatisfactory Equipment Report). If Form No. 468 is not available, see TM 38-250. Failure or unsatisfactory performance of equipment used by Army Air Forces will be reported on Army Air Forces Form No. 54 (unsatisfactory report).

9. INSPECTION.

a. General. At regular intervals during the operation of Telephone TP-9, inspect the equipment to see that all parts are functioning properly.

b. Batteries. The batteries should be checked weekly with a voltmeter. Voltage measurements should be made under actual load conditions. Replace the batteries when the measured voltage drops to about two-thirds of the rated voltage.

c. Vacuum Tubes. Test the vacuum tubes at least once a month and make replacements when necessary.

10. SERVICING.

a. Repairs by Operating Personnel. Repairs on Telephone TP-9 by operating personnel will be confined to testing and replacement of batteries, vacuum tubes, and handset (par. 11a). All other repairs will be made by qualified maintenance personnel only. For information on replacement of batteries, refer to the operating instructions label mounted on the equipment.

b. Repairs by Maintenance Personnel. (1) All repairs, other than the replacement of batteries, vacuum tubes, and handset, are to be made by maintenance personnel. To assist in the location of trouble in the telephone set, schematic and wiring diagrams appear in figures 6 and 12, respectively. A wiring diagram of the tube socket connections is shown in paragraph 18. Directions for

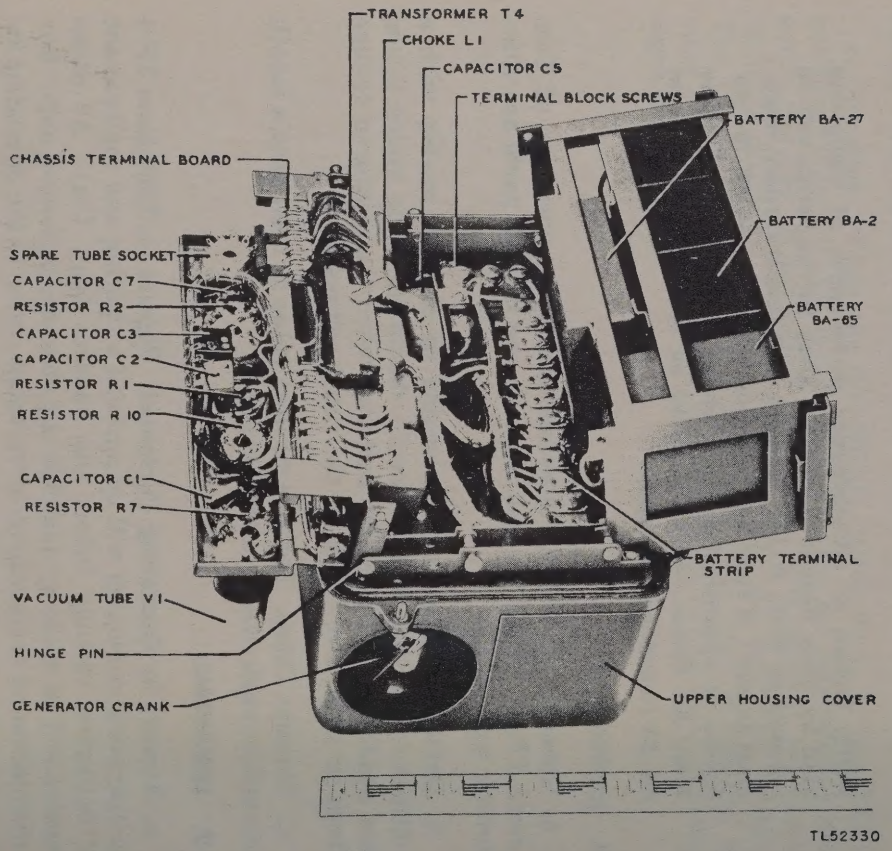

Figure 7. Telephone TP-9, battery and amplifier compartments open.

the adjustment of the generator, the ringer, and the visual signal are given in paragraph 12, and a trouble-shooting chart appears in paragraph 16. Complete instructions for the replacement of parts are given in paragraph 11.

(2) Transformers, capacitors, resistors, switches, and gain control must be replaced only when necessary. When replacing or adjusting apparatus on any of the units, take care not to drop excess solder on apparatus parts or on wiring terminals. *Use only rosin-core solder. Avoid all soldering pastes or acids.*

(3) All screws which enter tapped holes in the aluminum casting must be protected by coating the threads with an anti-seize substance such as Alcoa thread lubricant, which is a paste of 50 percent zinc dust (200 mesh) and 50 percent petrolatum.

(4) Remove the lower housing to locate trouble in the amplifier circuits of Telephone TP-9 (par. 4a). Then place the set on a firm support; remove the two side screws holding the battery compartment to the frame and the two screws holding the amplifier compartment to the frame. Tilt the two compartments back. Loosen the two fasteners on the amplifier compartment (fig. 3). This will expose the socket terminals and allow access to the parts that are mounted on the chassis.

11. REPLACEMENT OF PARTS.

a. Handset TS-9-( ). To replace the handset and/or cord, disconnect the cord from the body of the telephone by first loosening the three screw terminals on the jack. Then unfasten the stay cord, unscrew the transmitter cap, and remove the transmitter unit. Loosen the screws holding the three conductors and unfasten the stay cord. Replace the handset, tighten the screws, and refasten the stay cord.

b. Generator GN-38-B. (1) Remove the two holding screws from the battery compartment, and swing the battery compartment back (fig. 3). Remove the two holding screws from the amplifier chassis (fig. 3). Remove the two split pins which hold the amplifier chassis to the bracket, and lift the amplifier chassis from the frame. Place it aside, being very careful not to break or pull out any soldered cable connections.

(2) Remove the four screws which hold the generator to the top of the upper housing. Move the generator to one side, and disengage the universal joint which connects the armature shaft to the generator crank. Lift the generator out of the housing and

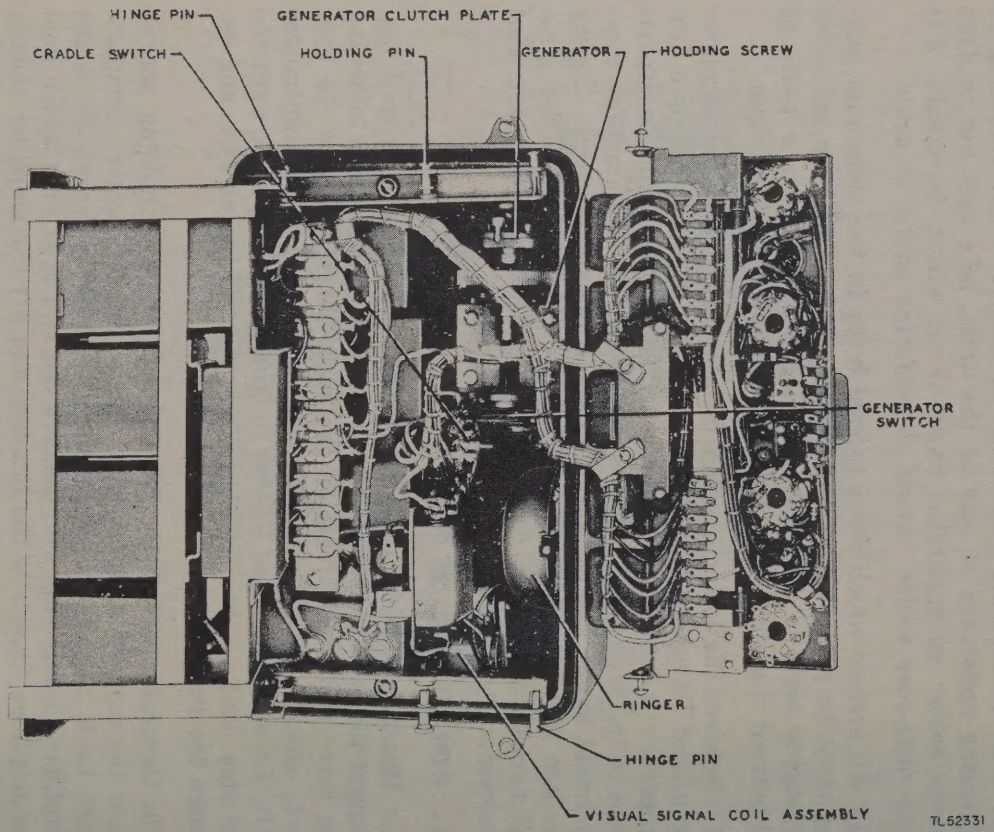

Figure 8. Telephone TP-9, amplifier chassis removed.

remove the screws holding the soldering lugs to the generator switch. These are the only connections on the generator.

NOTE: It is not necessary when removing the generator to remove the waterproof bearing which holds the shaft of the generator crank.

(3) Connect the soldering lugs, which are attached to the wiring, to the new generator, and place the generator in the housing. Line up the universal joint which connects the armature shaft to the generator crank. Coat the threads of the four screws which hold the generator to the housing with the anti-seize substance discussed in paragraph 10b (4). Replace the screws. With an ohmmeter check to see that the generator frame is not grounded to the housing.

CAUTION: Do not tighten the screws too tightly. The threads in the aluminum castings are easily stripped.

c. Ringer MC-131. (1) Remove the battery compartment and amplifier chassis as described in subparagraph b above.

(2) Remove the four screws which hold the ringer to the upper housing. Lift the ringer out of the housing and unsolder the wires connected to it.

(3) Solder the wires to the new ringer, and place the new ringer in the housing. Coat the threads of the screws which hold the ringer to the housing with the anti-seize substance discussed in paragraph 10b(4). Replace the screws.

CAUTION: Do not tighten the screws too tightly. The threads in aluminum casting are easily stripped.

d. SIG-BELL Switch. (1) Loosen the two setscrews in the knob on the front panel, and take the knob off. Remove the locknut on the front panel which holds the switch to the housing. *Use a crescent wrench to remove this nut, not pliers.* Carefully pull the switch out from the rear of the housing, and unsolder the connections.

(2) Solder the connections to the new switch and place the switch in position from the rear of the housing. Replace the locknut which holds the switch to the front panel, and tighten with a crescent wrench. Replace the knob, and tighten the setscrews.

e. GAIN Control. The GAIN control is removed by taking off the knob, removing the locknut, and pulling the control out in the same manner described in subparagraph d above.

947407 O - 51 - 4

f. Cradle Switch. (1) Remove the cradle and latch assembly from the housing by removing the two screws. Remove the cradle-switch lever by loosening the setscrew which holds it to the switch shaft, and pulling the lever off the shaft. Remove the locknut which holds the switch to the housing. *Use a crescent wrench to remove this nut, not pliers.*

(2) Remove the lower housing and turn the unit over. Tilt the battery compartment out of the way, and remove the amplifier chassis from the frame (par. 11b(1)). Remove the four screws which hold the generator in place, and lift the generator out of the housing. Pull the cradle switch out, and unsolder the connections.

(3) Solder the connections to the new cradle switch, and insert the switch in its proper position. Replace the generator, making sure that the threads of the screws which hold the generator to the housing have been coated with anti-seize substance. Replace the amplifier housing and the battery compartment. Replace the locknut on the front panel, and tighten with a crescent wrench. Replace the cradle-switch lever, and the cradle and latch assembly.

g. Handset Terminal. Remove the three screws from the under side of the housing which hold the handset terminal to the housing. Be careful not to lose the washers. Lift the handset terminal from the housing. Install the new terminal. Replace the soldering lugs containing the wiring connections, and replace the screws.

h. Relay K1. (1) Relay K1 is hermetically sealed against dust and moisture. If the relay becomes defective, do not attempt to open the can in which the relay is mounted.

(2) Replace the relay as follows: Remove the four screws which hold the relay can to the chassis; carefully withdraw the relay far enough to expose the terminals. Unsolder the connections to the relay, and remove the relay. Solder the connections to the new relay, and fasten the relay to the chassis with the four screws.

12. ADJUSTMENTS.

All parts of the telephone are adjusted in production and should not require adjustment in normal field use. If adjustments are necessary, however, make the following tests:

a. Visual Signal. (1) The spring tension on the visual-signal leaf should be adjusted so that the leaf will just barely be held in place by the magnet. If this condition is not met, weak ringing currents will not operate the visual signal. To adjust the spring tension, follow the procedure given below.

(2) Release the visual-signal leaf by hand, and hold the leaf close to the magnet. Loosen the clamping screw which holds the adjusting pin in position (fig. 9). Turn the adjusting pin to regulate the tension on the spring. The tension on the spring should be adjusted so that the magnet will just barely hold the leaf in position. If the spring tension is too loose, weak ringing currents will not operate the signal.

(3) When the spring tension has been adjusted properly, tighten the clamping screw which holds the adjusting pin in place.

NOTE: Do not tighten the clamping screw any more than is necessary to hold the adjusting pin in place. The brackets are made of aluminum, and the threads are easily stripped.

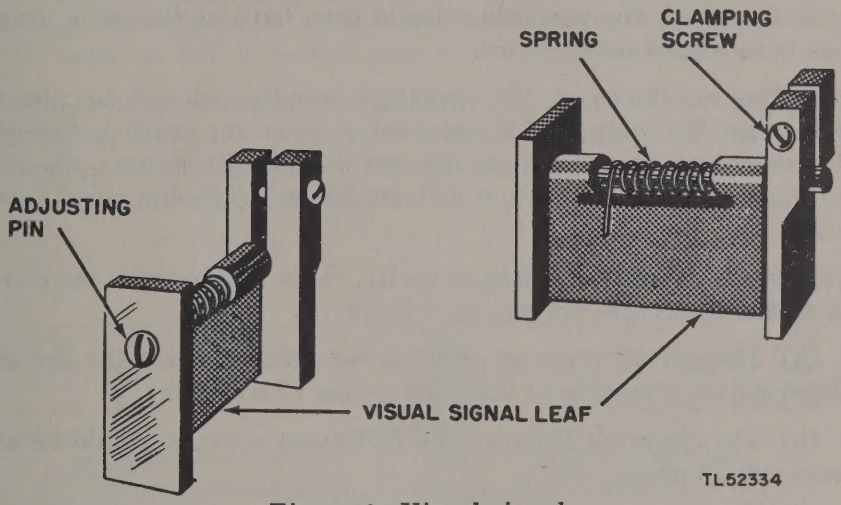

Figure 9. Visual signal.

b. Ringer MC-131. (1) When the clapper is moved manually away from the gong projection and released, the magnet should pull it back. If this does not occur, the magnet is weak and must be replaced.

(2) The resistance of each coil is about 650 ohms (1,300 ohms for the two in series). A deviation of more than 15 percent from this value indicates a defective coil.

(3) The ringer should operate on 6 milliamperes at 16 to 20 cycles per second. If the ringer draws more current, it should be replaced. Adjust the ringer as follows:

(a) Operate the clapper manually. It should strike the gong projections, rebound, and come to rest with a slight clearance between the clapper and the nearest gong projection.

(b) If the condition in subparagraph (a) above does not exist, loosen the two gong-clamping screws and rotate the gong until the clapper strikes each gong projection equally.

(c) If the travel of the clapper is not sufficient or is excessive, increase or decrease the armature travel by means of the two adjusting nuts located at the end of the magnet opposite the clapper.

(d) If the ringer cannot be adjusted by the above means, as a last resort bend the clapper rod.

c. Generator GN-38-B. (1) The generator should turn easily when the output circuit is open. When the output terminals are short-circuited, the generator should turn hard as though a drag has been placed on it.

(2) The resistance of the armature winding should be about 400 ohms. The output of the generator, when the crank is turned at a speed of approximately 200 revolutions per minute, should be more than 45 volts when delivered to a 1,000-ohm resistance load.

(3) If the generator switch is faulty, clean and burnish the contacts and adjust the springs as follows:

(a) The contact pressure of the lower spring against the end of the armature should be at least 100 grams (3.5 ounces).

(b) The clearance between the two upper springs should be at least 0.035 inches.

(c) The clearance between the buffer on the upper shaft and the nearest spring should be at least 0.025 inches when the shaft is in its normal position.

(d) When the shaft is in the cranking position, the contact pressure between the two upper springs should be between 75 grams (2.6 ounces) and 125 grams (4.4 ounces).

CAUTION: Do not remove the alnico magnet pole pieces of the generator. If the magnetic bridge between the two magnets is disturbed, the magnets may become discharged to such an extent that the output of the generator will be lowered.

13. LUBRICATION.

In general, lubrication as a field service is not required for Telephone TP-9. When the set is in a repair station for reconditioning, the generator should be lubricated before it is put back

in service. To lubricate the generator, follow the procedure given below.

a. Clean all dirt and grease from bearings and gear surfaces. Use a cloth or sash brush moistened with cleaning fluid. Do not allow cleaning fluid to enter the armature coil.

> **NOTE:** Leaded gasoline will not be used as a cleaning fluid for any purpose. Solvent, Dry Cleaning, Federal Specification P-S-661a, is available, as a cleaning fluid, through established supply channels. Oil, Fuel, Diesel, U. S. Army Specification 2-102B, may be used for cleaning purposes when solvent, dry cleaning, is not at hand. Since unleaded gasoline is available only in limited quantities, and only in certain locations, it should be used for cleaning purposes only when no other agent is suitable. Carbon tetrachloride, or fire-extinguishing liquid (carbon tetrachloride base), will be used, if necessary, *only on contact parts of electronic equipment.*

b. Lubricate all points as indicated in figure 10. *Never use an excess of lubricant.* The generator is mounted upside down in the housing of the telephone, and excess lubricating materials will run down into the telephone set.

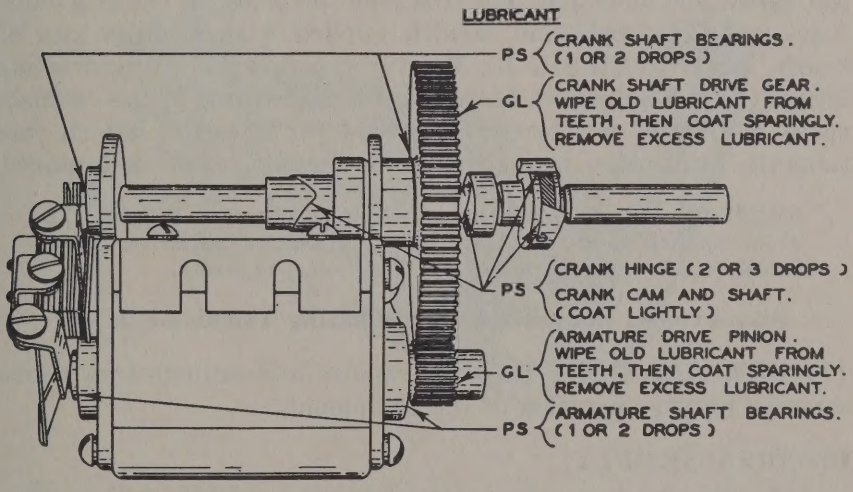
LUBRICANT
PS
CRANK SHAFT BEARINGS. (1 OR 2 DROPS)
GL
CRANK SHAFT DRIVE GEAR. WIPE OLD LUBRICANT FROM TEETH, THEN COAT SPARINGLY. REMOVE EXCESS LUBRICANT.
PS
CRANK HINGE (2 OR 3 DROPS)
CRANK CAM AND SHAFT. (COAT LIGHTLY)
GL
ARMATURE DRIVE PINION. WIPE OLD LUBRICANT FROM TEETH, THEN COAT SPARINGLY. REMOVE EXCESS LUBRICANT.
PS
ARMATURE SHAFT BEARINGS. (1 OR 2 DROPS)

- KEY -

LUBRICANT	
PS - OIL, LUBRICATING, PRESERVATIVE, SPECIAL,	U.S. ARMY 2-120
GL - GREASE, LUBRICATING, SPECIAL,	SPEC. NO. AXS-637

TL90795A

Figure 10. Generator GN-38-B, lubrication points.

14. MOISTUREPROOFING AND FUNGIPROOFING.

a. General. The operation of Signal Corps equipment in tropical areas where temperature and relative humidity are extremely high requires special attention. The following items represent problems which may be encountered in operation:

(1) Resistors, capacitors, coils, chokes, transformer windings, etc., fail.

(2) Electrolytic action takes place in resistors, coils, chokes, transformer windings, etc., causing eventual break-down.

(3) Hook-up wire and cable insulation break down. Fungus growth accelerates deterioration.

(4) Moisture forms electrical leakage paths on terminal boards and insulating strips, causing noise and crosstalk.

(5) Moisture provides leakage paths between battery terminals.

b. Treatment. A moistureproofing and fungiproofing treatment has been devised which, if properly applied, provides a reasonable degree of protection against fungus growth, insects, corrosion, salt spray, and moisture. The treatment involves the use of a moisture- and fungi-resistant varnish applied with a spray gun or brush. Refer to TB SIG 13, Moistureproofing and Fungiproofing Signal Corps Equipment, for a detailed description of the varnish-spray method of moistureproofing and fungiproofing which contains the description and use of equipment and materials required.

> CAUTION: Varnish spray may have toxic effects if inhaled. To avoid inhaling spray, use respirator if available; otherwise, fasten cheesecloth or other cloth material over nose and mouth.

c. Step-by-step Instructions for Treating Telephone TP-9.

(1) PREPARATION. Make all repairs and adjustments necessary for proper operation of the equipment.

(2) DISASSEMBLY.

(a) Unfasten the four screws which hold the two housings together, and remove the lower housing (not to be treated).

(b) Remove the two holding screws from the battery compartment. Remove the two split pins which hold the battery compartment to the mounting brackets, and take off the battery compartment (not to be treated).

(c) Remove the two chassis fasteners from the amplifier chassis. Remove the two holding screws, and swing the amplifier chassis outward.

(d) Remove the two mounting screws from tne battery terminal strip. Lift the terminal strip to gain access to its under side.

(e) Clean all dirt, dust, rust, fungus, oil, grease, etc., from the equipment to be processed.

(3) MASKING.

(a) Mask the case gasket with tape only (fig. 11).

(b) Using cloth or paper, form a common cover over the main part of the unit to prevent the entrance of varnish while spraying the internal wiring of the amplifier chassis.

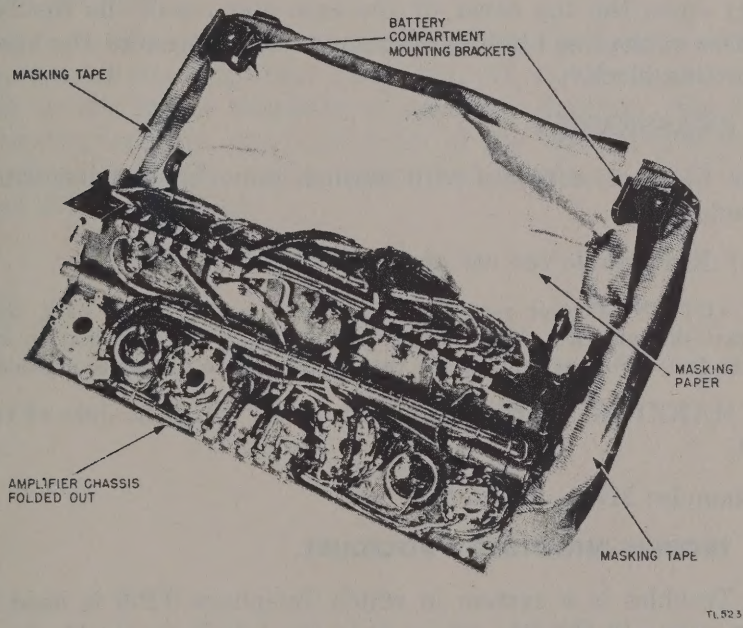

Figure 11. Masking for moistureproofing and fungiproofing.

(4) DRYING. Dry the chassis for 4½ to 5½ hours at 135° F. *Do not exceed 135° F.*

(5) VARNISHING. Apply three coats of moistureproofing and fungiproofing varnish (Lacquer, Fungus-resistant, Spec. No. 71-2202 (Stock No. 6G1005.3), or equal) as follows:

(a) Spray all the internal wiring and small parts of the amplifier chassis, and as much of its connecting cable not covered by masking as possible.

(b) After three spray coats have been applied, remove the masking.

(c) Brush the coils of the visual signal magnet as completely as possible.

(d) Brush both sides and all edges of the battery terminal strip.

(e) Brush all wires and connections, except the cradle switch connections, which were protected during the spray application.

(f) Brush the surface of the metal-cased capacitors, the surfaces of the bell, and the bottoms of the five transformers to provide a fungicidal reservoir.

(g) Open the top cover of the case and brush the insulating washers of the line binding posts, and the surfaces of the handset connecting block.

(6) REASSEMBLY.

(a) Clean all contacts with varnish remover, and burnish the contacts.

(b) Reassemble the set and test its operation.

CAUTION: Do not reassemble the waterproof housing until the varnish has dried. Vapor pressure built up by the evaporation of the fast-drying solvents in the varnish may cause the set to explode.

(7) MARKING. Mark the set with "MFP" and the date of treatment.

Example: MFP—8 Oct 44.

15. TROUBLE-SHOOTING PROCEDURE.

a. Troubles in a system in which Telephone TP-9 is used may occur either in the line wires or in the telephone itself. In general, an indication of the condition of the line and the telephone can be determined to some extent by the ringing signals. If a ringing signal is received, but it is impossible to hear over the circuit, the telephone should be suspected of being faulty. If no ringing signals or speech signals can be received, the line can be suspected of being at fault. Noisy operation may occur as a result of trouble in either the line or the telephone.

b. When trouble is encountered, a quick check may be made by changing the telephone to local battery operation (par. 6). This check is especially useful for determining the origin of trouble causing noisy operation, and also for checking the condition of the amplifiers. This check will be satisfactory only when losses in the circuit are not excessive. A more reliable way of testing the telephone is to disconnect it from the line and connect it to a telephone which is known to be in working order. Telephone EE-8-( ) may be used for this purpose.

c. After the trouble has been localized to either the line or the telephone, proceed to locate the trouble.

(1) If it has been determined that the line is at fault, report the trouble to wire maintenance personnel. The line may be checked with any one of the line-testing sets available. Refer to the instructions accompanying the test set for the proper procedure in making the tests.

(2) If the trouble is in the telephone, follow the procedure outlined in the trouble-shooting chart (par. 16). To further assist in locating trouble in the telephone, a schematic diagram (fig. 6), a wiring diagram (fig. 12), a diagram of the vacuum-tube socket connections (par. 18), and a voltage and resistance chart (pars. 19 and 20) are supplied.

16. TROUBLE-SHOOTING CHART.

a. Symptom: Speech Signals Weak, or No Sound Heard in Receiver.

PROBABLE LOCATION OF FAULT	PROCEDURE
1. Line wires.	*(a)* Follow the procedure given in paragraph 15.
	(b) If trouble is not corrected, follow procedure given below.
2. Cradle switch S1 in locked position.	*(a)* Push latch to unlock cradle switch.
	(b) If trouble is not corrected, follow procedure given below.
3. Batteries run down.	*(a)* Test voltage of batteries with voltmeter. (Test should be made under actual load conditions.)
	(b) If voltage is less than two-thirds of rated voltage, replace batteries.
	(c) If trouble is not corrected, follow procedure given below.
4. Defective vacuum tubes.	*(a)* Test tubes V2 and V3. Replace faulty tubes.
	(b) If trouble is not corrected, follow procedure given below.
5. Defective handset and/or cord.	*(a)* Replace handset and/or cord according to the procedure outlined in paragraph 11*a*.
	(b) If trouble is not corrected, follow procedure given below.
6. Defective relay K1.	*(a)* Check continuity through relay K1. If relay is faulty, replace it according to the procedure outlined in paragraph 11*h*.

	(b) If trouble is not corrected, follow procedure given below.
7. Defective cradle switch S1.	*(a)* Check contacts of cradle switch S1.
	(b) If contacts are defective and cannot be adjusted, replace switch.
	(c) If trouble is not corrected, follow procedure given below.
8. Defective bell or visual signal drop.	*(a)* Change setting of SIG-BELL switch. If speech can come through on new setting, check bell or drop, as the case may be.
	(b) Replace defective bell or signal drop.
	(c) If trouble is not corrected, follow procedure given below.
9. Amplifier circuit.	*(a)* Make voltage and resistance measurements on circuit.
	(b) Make any necessary repairs as indicated by voltage and resistance measurements.

b. Symptom: No Speech Output, or Speech Output Weak.

PROBABLE LOCATION OF FAULT	PROCEDURE
1. Cradle switch S1 in locked position.	*(a)* Push latch to unlock cradle switch.
	(b) If trouble is not corrected, follow procedure given below.
2. Batteries run down.	*(a)* Test voltage of batteries with voltmeter. (Test should be made under actual load conditions.)
	(b) If voltage is less than two-thirds of rated voltage, replace batteries.

		(c) If trouble is not corrected, follow procedure given below.
3.	Defective vacuum tubes.	*(a)* Test amplifier tube V1. Replace tube if necessary.
		(b) If trouble is not corrected, follow procedure given below.
4.	Defective handset and/or cord.	*(a)* Replace handset and/or cord according to procedure outlined in paragraph 11*a*.
		(b) If trouble is not corrected, follow procedure given below.
5.	Defective relay K1.	*(a)* Check continuity through relay K1. If relay is faulty, replace it according to the procedure outlined in paragraph 11*h*.
		(b) If trouble is not corrected, follow procedure given below.
6.	Defective cradle switch S1.	*(a)* Check contacts of cradle switch S1.
		(b) If contacts are defective and cannot be adjusted, replace switch according to procedure outlined in paragraph 11*f*.
		(c) If trouble is not corrected, follow procedure given below.
7.	Transmitting amplifier.	*(a)* Make voltage and resistance measurements on circuit.
		(b) Make any necessary repairs as indicated by voltage and resistance measurements.

c. Symptom: High Noise Level Prevails.

PROBABLE LOCATION OF FAULT	PROCEDURE
1. Line wires grounded.	*(a)* Follow the procedure given in paragraph 15.
	(b) If trouble is not corrected, follow procedure given below.
2. Defective vacuum tubes.	*(a)* Replace each vacuum tube until noise ceases.
	(b) If trouble is not corrected, follow procedure given below.
3. Defective batteries.	*(a)* Replace batteries.
	(b) If trouble is not corrected, follow procedure given below.
4. Loose connections.	*(a)* Check all soldered connections, switch contacts, and relay contacts.
	(b) Make any necessary repairs as determined by the above inspection.

d. Symptom: Visual Signal or Bell Does Not Operate, Depending on the Setting of the SIG-BELL Switch.

PROBABLE LOCATION OF FAULT	PROCEDURE
1. Line wires.	*(a)* Follow the procedure given in paragraph 15.
	(b) If trouble is not corrected, follow procedure given below.

2. Defective bell or visual signal.	*(a)* Measure resistance between binding posts. Resistance should be 1,300 ohms when the SIG-BELL switch is in the BELL position, and 1,300 ohms in the SIG position.
	(c) Check visual signal or bell, as the case may be.
	(d) If trouble is not corrected, follow procedure given below.
3. Defective switch on Generator GN-38-B.	*(a)* Check switch contacts on Generator GN-38-B.
	(b) If switch is defective, try to adjust according to procedure given in paragraph 12*c* (3).
	(c) If trouble is not corrected, replace generator.

e. Symptom: No Ringing Current Output.

PROBABLE LOCATION OF FAULT	PROCEDURE
Defective GN-38-B.	*(a)* Check switch contacts on Generator GN-38-B.
	(b) If switch is defective, try to adjust according to procedure given in paragraph 12*c* (3).
	(c) If trouble is not corrected, replace generator.

SECTION V
SUPPLEMENTARY DATA

17. MAINTENANCE PARTS LIST FOR TELEPHONE TP-9.

Ref symbol	Signal Corps stock No.	Name of part and description	Quan per unit	Running spares	Orgn stock	3d ech	4th ech	5th ech	Depot stock
	4B5500-9.1	TELEPHONE TP-9.							
		PART I							
	2Z9406.134	BOARD, terminal: 6 solder terminals; linen base natural bakelite; 2 3/16" lg x 1 7/32" wd x 1/16" thk; Fed Tele & Rad W28-50, dwg WTB2560 (numbering 1 to 6 right to left, characters upside down under terminals with 3/32" stamping filled with white); (center terminal board).	1				*	*	*
	2Z9408.111	BOARD, terminal: 8 solder terminals; linen base natural bakelite; 3 1/4" lg x 31/32" wide x 1/16" thk; Fed Tele & Rad W28-51, dwg WTB2560 (numbering 1 to 8 left to right under terminals with 3/32" stamping filled with white); (left-hand terminal board).	1				*	*	*

* Indicates stock available.

17. MAINTENANCE PARTS LIST FOR TELEPHONE TP-9 (contd).

Ref symbol	Signal Corps stock No.	Name of part and description	Quan per unit	Running spares	Orgn stock	3d ech	4th ech	5th ech	Depot stock
	2Z9408.110	BOARD, terminal: 8 solder terminals; linen base natural bakelite; 3¼″ lg x 31/32″ wd x 1/16″ thk; Fed Tele & Rad W28-49, dwg WTB2560 (numbering 9 to 16 left to right under terminals with 3/32″ stamping filled with white); (right-hand terminal board).	1				*	*	*
	2Z9410.96	BOARD, terminal: 10 brass, burnished nickel-plated; # 8-32 x 5/16″, screw terminals; XP bakelite; 7⅜″ lg x ⅞″ wd x ⅛″ thk; Jones HB; Fed Tele & Rad W28-46, dwg WTA2531 (two 0.180″ holes on 6⅞″ centers); (battery terminal board).	1				*	*	*
C6	3DB10-116	CAPACITOR, fixed: electrolytic; 10 mf + 50% − 10%; 25 vdcw; 2⅛″ lg x 1″ diam; Sprague 5318; Fed Tele & Rad W2-12; (metal case, hermetically sealed; 2 insulated solder lug terminals; 2 mtg feet with 7/32″ x 5/32″ holes on 1⅞″ centers; Sig C spec 71-1116); (bypass).	1			*	*	*	*

* Indicates stock available.

17. MAINTENANCE PARTS LIST FOR TELEPHONE TP-9 (contd).

Ref symbol	Signal Corps stock No.	Name of part and description	Quan per unit	Running spares	Orgn stock	3d ech	4th ech	5th ech	Depot stock
C7	3DB16-33	CAPACITOR, fixed: electrolytic; 16 mf + 50% − 10%; 150 vdcw; 2⅛″ lg x 1″ diam; Sprague 5318; Fed Tele & Rad W2-13; (metal case; hermetically sealed; 2 insulated solder lug terminals; 2 mtg feet with 7/32″ x 5/32″ holes on 1⅞″ centers; Sig C spec 71-1116); (plate bypass).	1			*	*	*	*
C1	3K2547114	CAPACITOR, fixed: mica; 470 mmf ± 20%; 500 vdcw; JAN type CM25A471M; Fed Tele & Rad W5-71; (in transmitting amplifier grid).	1			*	*	*	*
C2	3K3010214	CAPACITOR, fixed: mica; 1,000 mmf ± 20%; 500 vdcw; JAN type CM35A102M; Fed Tele & Rad W5-72; (screen bypass for V2).	1			*	*	*	*
C3	3K3547214	CAPACITOR, fixed: mica; 4,700 mmf ± 20%; 500 vdcw; JAN type CM35A472M; Fed Tele & Rad W5-68; (screen bypass for V3).	1			*	*	*	*
C4	3K4010314	CAPACITOR, fixed: mica; 10,000 mmf ± 20%; 300 vdcw; JAN type CM40A103M; Fed Tele & Rad W5-73; (interstage coupling).	1			*	*	*	*

* Indicates stock available.

17. MAINTENANCE PARTS LIST FOR TELEPHONE TP-9 (contd).

Ref symbol	Signal Corps stock No.	Name of part and description	Quan per unit	Running spares	Orgn stock	3d ech	4th ech	5th ech	Depot stock
C5A, C5B	3DA500-196.1	CAPACITOR, fixed: paper; 2 section; 300,000 mmf ± 10%, 500,000 mmf + 20%, − 10%; 500 vdcw; 3⅛″ x 2″ x ¾″ thk; Fed Tele & Rad W3-100, dwg WTA2548; (blocking).	1			*	*	*	*
	4B5500-9/6	COIL ASSEMBLY, electromagnet: visual signal; 2 coils connected, approx 1,300 ohms, 6-hy, 6-ma; single winding, 1″ diam x 1⅜″ lg over-all; Fed Tele and Rad W10-94 dwg WTA2518; (coils per Sig C spec 71-669, dwg SCD-822 except additional hole #8-32 x ⅜″ tapped in core at opposite end; permanent magnet yoke, alnico #2, 1⅜″ lg x ½″ wd x ⅛″ thk, 2 holes 0.19″ diam on 1 1/16″ centers, slotted out to ends; 2 lockwashers #8 and 2 RHI screws #8-32 x ⅝″ lg); (visual indicator magnets); (coils similar to 4B3371/E5).	1			*	*	*	*
	4B454	CRANK, generator: Crank GC-9; folding handle; cast brass with black XX phenolic tube; dull ebanol "C"; over-all dimen when folded 2″ x ⅝″ x 1″; SC-D-1797-G.	1		*	*	*	*	*

* Indicates stock available.

17. MAINTENANCE PARTS LIST FOR TELEPHONE TP-9 (contd).

Ref symbol	Signal Corps stock No.	Name of part and description	Quan per unit	Running spares	Orgn stock	3d ech	4th ech	5th ech	Depot stock
	4B5500-9/11	GASKET: brass, cadmium-plated; waterproof seal for ¼″ shaft; Victor Mfg Co type W #62032; Fed Tele & Rad W38-8; (waterproofing generator and rotary switch shafts).	4				*	*	*
	4B5500-9/1	GASKET: synthetic rubber; housing; Buna-S rubber compound; moisture seal; rectangular-shaped; 11¼″ x 7″ round corners, section ¼″ x ¼″ with V-shaped groove on one side; molded in one piece; Fed Tele & Rad W38-9, dwg WTB2537; (seal between upper & lower castings).	1				*	*	*
	4B838B	GENERATOR, hand: Generator GN-38-B.	1				*	*	*
	4B5500-9/2	GLAND, watertight: bushing; aluminum alloy #17S-T; anodized olive drab; water seal; ⅞″ diam x ½″ lg over-all; hex. head ⅞″ across flats; Fed Tele & Rad W59-58, dwg WTA2534; (hex. head 3/16″ h, recessed 1/32″ d x ¾″ diam; ¾″ ID recessed ¼″, ¼″ d inside; coaxially tapped ⅜″-32); (for switch shafts).	3				*	*	*

* Indicates stock available.

17. MAINTENANCE PARTS LIST FOR TELEPHONE TP-9 (contd).

Ref symbol	Signal Corps stock No.	Name of part and description	Quan per unit	Running spares	Orgn stock	3d ech	4th ech	5th ech	Depot stock
	4B5500-9/3	GLAND, watertight: bushing; aluminum alloy #17S-T; anodized olive drab; waterseal; 7/8" diam x 3/8" lg over-all; hex. head 15/16" across flats; Fed Tele & Rad W59-62, dwg 2512 (hex. head 1/8" h, recessed 1/8" d x 9/16" diam; 7/8" OD-24 thds 1/4" lg, undercut to minor diam 1/32" wd at both ends of threads and recessed 5/8" diam x 1/32" d, thence beveled 30°; coaxially drilled 1/4" hole); (for generator shaft).	1				*	*	*
	6G589	GRAPHITE, powdered: 4 oz can; US Army spec 2-64A; (to be saturated with oil for generator extension shaft gland).	1			*	*	*	*
	6Z4872-3	GROMMET, rubber: fits 5/16" diam hole; 7/16" OD x 3/16" ID x 3/8" thk; Fed Tele & Rad W36-2, dwg WTA1436; (chassis mounting).	4				*	*	*
	4B1109	HANDSET, telephone: Handset TS-9.	1			*	*	*	*

* Indicates stock available.

17. MAINTENANCE PARTS LIST FOR TELEPHONE TP-9 (contd).

Ref symbol	Signal Corps stock No.	Name of part and description	Quan per unit	Running spares	Orgn stock	3d ech	4th ech	5th ech	Depot stock
	4B5008A/20	JACK ASSEMBLY, telephone: 3 jacks on bakelite strip for 3-cond plug; 3¼″ lg x 1 15/16″ wd x ½″ d over-all; Fed Tele & Rad # UP-10554; SC-D-1793.	1			*	*	*	*
	2Z5790-22	KNOB, round: black molded phenolic; for ¼″ diam shaft; single Fil H Brass screw # 6-32 x 3/16″ set at 45° clockwise from arrow point; arrow marking ½″ h x ⅞″ diam over-all; Fed Tele & Rad W26-9, dwg WTA2585; (brass insert; shaft hole ⅜″ d; molded counterbored 9/32″ diam, straight knurl); (visual or bell signal).	1			*	*	*	*
	2Z5790-23	KNOB, round: black molded phenolic; for ¼″ diam shaft; single Fil H Brass screw # 6-32 x 3/16″ set at 180° from arrow point; arrow marking ½″ h x ⅞″ diam over-all; Fed Tele & Rad W26-7, dwg WTA2565; (brass insert; shaft hole ⅜″ d; molded counterbored 9/32″ diam, straight knurl); (gain control).	1			*	*	*	*

* Indicates stock available.

17. MAINTENANCE PARTS LIST FOR TELEPHONE TP-9 (contd).

Ref symbol	Signal Corps stock No.	Name of part and description	Quan per unit	Running spares	Orgn stock	3d ech	4th ech	5th ech	Depot stock
	4B5500-9/4	LEAF, indicator: nicaloy or mu metal; olive drab enamel on one side, red enamel on other side; visual signal; approx 1⅜″ x 1″ x ⅜″ over-all; #20 ga; Fed Tele & Rad W47-64, dwg WTA2519; (middle section of top edge rolled to 0.150″ ID for hinge pin mtg; outer sections of top edge rolled approx 1/64″ to opposite side; 1 hole 0.040″ diam, 7/16″ from edge, ⅜″ below center line of rolled edge).	1			*	*	*	*
L1	4B5500-9/7	NETWORK, interstage coupling: single winding; 5.2 h; 1 5/16″ h x 1 3/16″ sc over-all; Fed Tele & Rad W12-15, dwg WTA71215 (500 v DC insulation test; inclosed metal case; two 0.189″ diam mtg holes on 1.606″ centers; vacuum-impregnated; potted with resistor and capacitor; 5 soldering lug terminals).	1			*	*	*	*
	6G1318	OIL, lubricating: 4 oz can; US Army spec 2-120 (used to saturate graphite for generator shaft extension gland).	1			*	*	*	*

* Indicates stock available.

17. MAINTENANCE PARTS LIST FOR TELEPHONE TP-9 (contd).

Ref symbol	Signal Corps stock No.	Name of part and description	Quan per unit	Running spares	Orgn stock	3d ech	4th ech	5th ech	Depot stock
	6L3972-32N	PIN, hinge: brass, free-turning; dull nickel-plated; indicator leaf; std #6 RH, 0.138″ diam x 2″ lg; Fed Tele & Rad W59-64, dwg WTA2520; (1 hole 0.040″ diam 7/8″ from end); (indicator leaf).	1			*	*	*	*
	6L3973-12-IN	PIN, hinge: locking; brass rod, free-turning; dull nickel-plated; chassis mtg; 25/32″ lg over-all, 3/8″ diam head; Fed Tele & Rad W59-68, dwg WTA2584; (head 1/16″ h; shoulder 1/16″ h x 1/4″ diam; shank 21/32″ lg x 0.187″ diam rounded edge; slot 0.04″ wd x 0.125″ diam, 9/32″ from end); (battery and amplification chassis).	2				*	*	*
	4B5500-9/8	PLATE, clutch: generator; linen base bakelite fungus and moisture proof; center shaft coupling; 1 1/4″ diam x 1/8″ thk; Fed Tele & Rad W47-63, dwg WTA2515; (4 holes 1/4″ diam slotted out out to circumference, located 90° apart on 3/8″ radius from center of plate); (for generator crank shaft).	1				*	*	*

* Indicates stock available.

17. MAINTENANCE PARTS LIST FOR TELEPHONE TP-9 (contd).

Ref symbol	Signal Corps stock No.	Name of part and description	Quan per unit	Running spares	Orgn stock	3d ech	4th ech	5th ech	Depot stock
	3Z737-21.2	POST, binding: screw type; rubber capped knob; 1¼″ lg x ½″ diam over-all; #8-32 x ½″ mtg stem; Eby "Sergeant 14RD", Fed Tele & Rad W27-2, dwg WTA1090.	2			*	*	*	*
K1	2Z7585-91	RELAY, general purpose: SPDT normal brake-make; 2 9/16″ lg x 1½″ wd x 1½″ h over-all; Sigma Instr 4 RHL; Fed Tele & Rad W94-6, dwg WTB2562; (5 contacts 0.625″ h; contact rating 1 v DC, 15 ma; coil 50 ohm; operate and release time less than 30 milliseconds; hermetically sealed; 2 mtg lugs 5/16″ off center, 1⅞″ mtg/c); (directional control relay for amplifier).	1			*	*	*	*
R3	3RC20BE221K	RESISTOR, fixed: composition; 220 ohms + 10%; ½ w; JAN type RC20BE221K; (grid first stage, receiving amplifier).	1			*	*	*	*
R4	3RC20BE331K	RESISTOR, fixed: composition; 330 ohms ± 10%; ½ w JAN type RC20BE331K; (anti-sidetone).	1			*	*	*	*

* Indicates stock available.

17. MAINTENANCE PARTS LIST FOR TELEPHONE TP-9 (contd).

Ref symbol	Signal Corps stock No.	Name of part and description	Quan per unit	Running spares	Orgn stock	3d ech	4th ech	5th ech	Depot stock
R5	3RC20BE102K	RESISTOR, fixed: composition; 1,000 ohms ± 10%; ½ w; JAN type RC20BE102K; (filament for receiving amplifier).	1			*	*	*	*
R7	3RC20BE563K	RESISTOR, fixed: composition; 56,000 ohms ± 10%; ½ w; JAN type RC20BE563K; (transmitting amplifier grid).	1			*	*	*	*
R8	3RC20BE154K	RESISTOR, fixed: composition; 150,000 ohms ± 10%; 12 w; JAN type RC20BE154K; (grid first stage, receiving amplifier).	1			*	*	*	*
R9	3RC20BE274K	RESISTOR, fixed: composition; 270,000 ohms ± 10%; ½ w; JAN type RC20BE274K; (screen V3).	1			*	*	*	*
R10, R11	3RC20BE474K	RESISTOR, fixed: composition; 470,000 ohms ± 10%; ½ w; JAN type RC20BE474K; (screen V2 and V3).	2			*	*	*	*

* Indicates stock available.

17. MAINTENANCE PARTS LIST FOR TELEPHONE TP-9 (contd).

Ref symbol	Signal Corps stock No.	Name of part and description	Quan per unit	Running spares	Orgn stock	3d ech	4th ech	5th ech	Depot stock
R1, R2	3Z5994-30	RESISTOR, fixed: wire-wound; 4-ohms ± 10%; ½ w; ⅝″ lg x 3/16″ diam; IRC BW-½; Fed Tele & Rad W8-70; Navy spec RE 13A 372J; (filament V2 and V3).	2			*	*	*	*
R12	2Z7272.13	RESISTOR, variable: composition; 250,000 ohms ± 20%; 3 terminals; body 1⅛″ diam x 0.491″ d; shaft 0.250″ diam x 1⅛″ lg; CTS type HT 35 Taper "C"; Fed Tele & Rad W7-13, dwg WTA2554; (bushing ⅜″ -32 x ⅜″ lg); (receiving gain control).	1			*	*	*	*
I1	4B3371	RINGER, telephone: Ringer MC-131; polarized; 2 coils ea 650 ohms; Sig C spec 71-669, dwg SC-D-822.	1			*	*	*	*
	6L3766-32-7.1	SCREW, hollow: Fil H; brass, dull nickel-plated; #6-32 x 3/16″ tapped in end of shank 0.203″ diam x 7/16″ lg; head 7/16″ diam x 0.151″ h, straight side 0.093″ h, slot 0.059″ wd x 0.086″ d; Fed Tele & Rad W53-137, dwg WTA2529; (jack terminal).	3			*	*	*	*

* Indicates stock available.

17. MAINTENANCE PARTS LIST FOR TELEPHONE TP-9 (contd).

Ref symbol	Signal Corps stock No.	Name of part and description	Quan per unit	Running spares	Orgn stock	3d ech	4th ech	5th ech	Depot stock
	6L440-3.1	SCREW, machine: RH; brass; #4-40 x 3/16"; (indicator bracket).	1			*	*	*	*
	6L6632-5.1	SCREW, machine: RH; brass; #6-32 x 5/16"; (cable clamp, capacitor mounting clamp, transformer, ringer, relay).	16			*	*	*	*
	6L6832-3.9A	SCREW, machine: Bind H brass; #8-32 x 3/16"; (amplifier subassembly).	2				*	*	*
	6L6832-5.1	SCREW, machine: RH; brass; #8-32 x 5/16"; (capacitor and ringer brackets).	4			*	*	*	*
	6L6832-9.81N	SCREW, machine: hex. head; brass, dull nickel-plated; #8-32 x 7/16"; (indicator bracket).	2			*	*	*	*
	6L6832-9.1	SCREW, machine: RH; brass; #8-32 x 9/16"; (right hinge bracket).	4				*	*	*
	6L7032-12.4	SCREW, machine: Fil H; brass, dull nickel-plated; #10-32 x 3/4"; shank diam 0.165", 3/8" lg under head; Fed Tele & Rad W53-145, dwg WTA2561; (cover screw).	4				*	*	*

* Indicates stock available.

17. MAINTENANCE PARTS LIST FOR TELEPHONE TP-9 (contd).

Ref symbol	Signal Corps stock No.	Name of part and description	Quan per unit	Running spares	Orgn stock	3d ech	4th ech	5th ech	Depot stock
	6L6832-7-1.5	SCREW, shoulder: RH; brass; free-turning, dull nickel-plated; approx 29/64" lg over-all; thd shank #8-32 x 3/16" lg; head 0.174" thk, 0.472" diam, slot 0.065" wd x 0.108" d; shoulder 1/4" diam x 3/32" lg; Fed Tele & Rad W53-138, dwg WTA2541; (cradle and cradle latch).	2				*	*	*
	.2Z8678.195	SOCKET, tube: octal; ceramic base; 1 1/16" diam x 7/16" h over-all; Ucinite #115001-1A; Fed Tele & Rad W17-32; (metal mtg plate; two 5/32" mtg holes; 1 1/2" mtg centers).	4			*	*	*	*
	4B5500-9/9	SPRING, hinge: #22 ga nickel silver wire, full spring temper; indicator leaf; coil 3/16" ID x 1/2" free length, one end extending 1/4" and other end extending 3/8"; Fed Tele & Rad W51-68, dwg WTA2522; (for indicator leaf).	1			*	*	*	*
	4B5500-9/10	STRAP, carrying: olive drab cotton webbing; 8' lg x 1 1/4" wd; Fed Tele & Rad W70-49, dwg WTB2587; (one end terminated w/grip tongue brass buckle, bronze finish; other end terminated w/brass tip, bronze finish; fungicide treatment).	1			*	*	*	*

* Indicates stock available.

17. MAINTENANCE PARTS LIST FOR TELEPHONE TP-9 (contd).

Ref symbol	Signal Corps stock No.	Name of part and description	Quan per unit	Run-ning spares	Orgn stock	3d ech	4th ech	5th ech	Depot stock
S2	3ZK9825-62.42	SWITCH, rotary: 1 pole, 2 position; single section; bakelite body; $^{27}/_{32}$″ wd x $1^{19}/_{64}$″ lg x $1\frac{1}{2}$″ d over-all; oak series 20, type 23; Fed Tele & Rad W20-36, dwg WTA2553; (3 contacts, shorting type; shaft $\frac{1}{4}$″ diam x $1\frac{1}{8}$″ lg, bushing $\frac{3}{8}$″ -32 x $\frac{3}{8}$″ lg; solder lug terminals); (bell or visual signal).	1			*	*	*	*
S1	3Z9550.62	SWITCH, rotary: 3 pole, 2 position; single section; 2″ diam: Oak type DH; Fed Tele & Rad W20-37, dwg WTA2547; (spring return from position 2 to normally closed position 1; 10 contacts, nonshorting type; shaft $\frac{1}{4}$″ diam x $1\frac{1}{4}$″ lg, bushing $\frac{3}{8}$″ -32 x $\frac{3}{8}$″ lg; solder lug terminals); (amplifier).	1			*	*	*	*
	3Z12004-8.7	TERMINAL, lug: ring type; brass, solder-coating; for #22 AWG wire; $1\frac{1}{16}$″ lg x $\frac{3}{8}$″ wd x 0.02″ thk over-all, w/ $\frac{1}{4}$″ stud hole and $\frac{3}{32}$″ wire hole; Cinch #1467-A, P-27; Fed Tele & Rad W58-57; (wires to Jack J1).	3			*	*	*	*

* Indicates stock available.

17. MAINTENANCE PARTS LIST FOR TELEPHONE TP-9 (contd).

Ref symbol	Signal Corps stock No.	Name of part and description	Quan per unit	Running spares	Orgn stock	3d ech	4th ech	5th ech	Depot stock
T3	2Z9631.219	TRANSFORMER, AF: input; pri 300 ohms, secd 250,000 ohms impedance; shielded steel shell; 1 5/16" h x 1 3/16" sq over-all; Fed Tele & Rad W15-57, dwg WTA71557; (turns ratio of pri to secd 27.4; freq response 200 to 10,000 cyc ± 1.3 db; 5 soldering lugs; two 0.189" diam mtg holes on 1.606" centers; vacuum-impregnated); (receiving amplifier).	1					*	*
T1	2Z9631.218	TRANSFORMER, AF: input; pri 1,255 ohms, secd 760 ohms impedance; shielded steel shell; 1 5/16" h x 1 3/16" sq over-all; Fed Tele & Rad W15-55, dwg WTA71555; (turns ratio winding 2-3 to 1-2, 3.84; winding 2-3 to 3-4, 3.95; winding 2-3 to 1-4, 7.80; freq response 200 to 10,000 cyc ± 1.0 db; 4 soldering lugs; two 0.189" diam mtg holes on 1.606" centers; vacuum-impregnated); (induction coil).	1					*	*

* Indicates stock available.

17. MAINTENANCE PARTS LIST FOR TELEPHONE TP-9 (contd).

Ref symbol	Signal Corps stock No.	Name of part and description	Quan per unit	Running spares	Orgn stock	3d ech	4th ech	5th ech	Depot stock
T2	2Z9632.309	TRANSFORMER, AF: output; pri 12,950 ohms, secd 300 ohms impedance; shielded steel shell; 1 5/16" h x 1 3/16" sq over-all; Fed Tele & Rad W15-56, dwg WTA71556; (turns ratio of pri to secd 6.57; freq response 200 to 10,000 cyc ± 1.0 db; 5 soldering lugs; two 0.189" diam mtg holes on 1.606" centers; vacuum-impregnated); (transmitting amplifier).	1					*	*
T4	2Z9632.308	TRANSFORMER, AF: output; pri 40,300 ohms, secd 200 ohms impedance; shielded steel shell; 1 5/16" h x 1 3/16" sq over-all; Fed Tele & Rad W15-58, dwg WTA71558; (turns ratio of pri to secd 14.1; freq response 200 to 10,000 cyc ± 1.5 db; 7 soldering lugs; two 0.189" diam mtg holes on 1.606" centers; vacuum-impregnated; potted with 2 capacitors); (receiving amplifier).	1					*	*
V1, V2, V3	2J3Q5GT	TUBE, electron: JAN-3Q5GT (VT-221); (amplification).	3	1	*	*	*	*	*

* Indicates stock available.

17. MAINTENANCE PARTS LIST FOR TELEPHONE TP-9 (contd).

Ref symbol	Signal Corps stock No.	Name of part and description	Quan per unit	Running spares	Orgn stock	3d ech	4th ech	5th ech	Depot stock
	6L73614-1	WASHER, curved: #25 ga phosphor bronze (flatwire) spring temper, burrs removed and cleaned; 9/32" ID x 1/2" OD, 0.017" thk, curved approx 1/2" radius, arc d 1/16"; Fed Tele & Rad W55-35, dwg WTA 2526; (lever latch).	2			*	*	*	*
	3G1790-7.1	WASHER, flat: Buna-S rubber; 0.170" ID, 7/16" OD, 1/16" thk; Fed Tele & Rad W40-3, dwg WTA2558; (indicator magnet coil).	2			*	*	*	*
	3G1790-10.1	WASHER, flat: Buna-S soft rubber; 3/8" ID, 5/8" OD, 1/16" thk; Fed Tele & Rad W40-2, dwg WTA2549; (switch gland).	3				*	*	*
	3G1838-7.5	WASHER, flat: linen base bakelite; 0.218" ID, 9/16" OD, 1/16" thk; Fed Tele & Rad W55-34, dwg WTA2521; (jack spacer and binding posts).	5			*	*	*	*
	3G1790-7.2	WASHER, flat: yellow gum rubber; 3/16" ID, 7/16" OD, 3/16" thk; Fed Tele & Rad W40-3, dwg WTA2558; (indicator magnet coil and jack terminal).	5			*	*	*	*

* ndicates stock available.

17. MAINTENANCE PARTS LIST FOR TELEPHONE TP-9 (contd).

Ref symbol	Signal Corps stock No.	Name of part and description	Quan per unit	Running spares	Orgn stock	3d ech	4th ech	5th ech	Depot stock
		PART II Dry batteries shown are used with the equipment but are not part of it. They will not be automatically preshipped (except for new equipments) but are to be requisitioned in quantities necessary for the particular organization and/or theatre. Stocks are limited to 3 months supply (Office of the Chief Signal Officer, Serial #56, dated 14 April 1944).							
BA-2	3A2	BATTERY, dry: Sig C Battery BA-2; 22½ v; rectangular; 3 7/16" lg x 2 1/32" wd x 2 19/32" h over-all; Eveready #763 or equal; (screen and plate).	3		*	*	*	*	*
BA-27	3A27	BATTERY, dry: Sig C Battery BA-27; 4½ v, tapped at 3 v and 1½ v; rectangular; 4" lg x 1 7/16" wd x 3 1/16" h over-all; Eveready #714 or equal; (control).	1		*	*	*	*	*

* Indica es stock available.

17. MAINTENANCE PARTS LIST FOR TELEPHONE TP-9 (contd).

Ref symbol	Signal Corps stock No.	Name of part and description	Quan per unit	Running spares	Orgn stock	3d ech	4th ech	5th ech	Depot stock
BA-65	3A65	BATTERY, dry: Sig C Battery BA-65; 1½ v; square; 2 9/16″ x 2 9/16″ x 4″ h over-all: Eveready #742 or equal; (filament).	1		*	*	*	*	*
		REPAIR PARTS OF COMPONENTS							
		In addition to the foregoing, items shown in the following lists are necessary for higher echelon maintenance of Telephone TP-9.							
		GENERATOR GN-38							
	4B838/A5	ARMATURE ASSEMBLY.					*	*	*
	4B838/S1	CRANKSHAFT AND CAM ASSEMBLY: shaft with driving cam and buffer.					*	*	*
	4B838/G1	GEAR, large: 99-tooth.					*	*	*
	4B838/G2	GEAR, pinion: 21-tooth.					*	*	*

* Indicates stock available.

17. MAINTENANCE PARTS LIST FOR TELEPHONE TP-9 (contd).

Ref symbol	Signal Corps stock No.	Name of part and description	Quan per unit	Running spares	Orgn stock	3d ech	4th ech	5th ech	Depot stock
	4B838/P1	PIN: for pinion gear.					*	*	*
	4B838/S3	SPRING: steel wire (cam operating).					*	*	*
	4B838/S2	SPRING ASSEMBLY, contact.					*	*	*
		Miscellaneous Hardware							
	6L6632-8.5	SCREW, machine: RH, #6-32 x ½"; (generator contact spring assembly mounting)					*	*	*
	6L6832-6.5A	SCREW, machine: RH; #8-32 x ⅜"; (generator assembly).					*	*	*
	6L6832-6.7A	SCREW, machine: FH; #8-32 x ⅜"; (generator assembly).					*	*	*
	6L7932-2, 31S	SCREW, set: headless; steel; #8-32 x ⅛"; cup point; (crank shaft collar locking).					*	*	*
	6L73006	WASHER, lock: steel; std for #6 screw; (generator contact spring assembly mounting).					*	*	*

* Indicates stock available.

17. MAINTENANCE PARTS LIST FOR TELEPHONE TP-9 (contd).

Ref symbol	Signal Corps stock No.	Name of part and description	Quan per unit	Running spares	Orgn stock	3d ech	4th ech	5th ech	Depot stock
	6L730086	WASHER, lock: steel; std for # 8 screw; (generator assembly).					*	*	*
		HANDSET TS-9-A (Auto Elec)							
	4B1109A/20	CAP, receiver.					*	*	*
	4B1109A/50/1	CONTACT ASSEMBLY: transmitter.					*	*	*
	3E333	CORD: CC-333.					*	*	*
	4B1109A/24	HANDLE, handset.					*	*	*
	4B1109A/50/2	MOUTHPIECE: transmitter.					*	*	*
	4B1109A/1	RECEIVER, handset.					*	*	*
	4B418/32	RING, clamping: (mouthpiece, transmitter).					*	*	*
	4B1109A/6	RING, clamping: (receiver).					*	*	*

* Indicates stock available.

17. MAINTENANCE PARTS LIST FOR TELEPHONE TP-9 (contd).

Ref symbol	Signal Corps stock No.	Name of part and description	Quan per unit	Running spares	Orgn stock	3d ech	4th ech	5th ech	Depot stock
	3Z9650	SWITCH ASSEMBLY ("Push to Talk").					*	*	*
	4B1109J/3	TRANSMITTER, handset.					*	*	*
		Miscellaneous Hardware							
	6L6348-4S	SCREW, machine: FH: #3-48 x 1/4"; (secures clamping plate to receiver cap).					*	*	*
	6L6440-3.59	SCREW, machine: FH; #4-40 x 3/16"; (secures switch to handle).					*	*	*
	6L6540-3.8	SCREW, machine; Bind H; #5-40 x 3/16"; (connects Terminals TM-165 in handle).					*	*	*
	4B1109A/3	SCREW: stay cord (secures cord in handle).					*	*	*
		HANDSET TS-9-C, H, Q, W (St Carl)							
	4B1109H/20	CAP, receiver.					*	*	*

* Indicates stock available.

17. MAINTENANCE PARTS LIST FOR TELEPHONE TP-9 (contd).

Ref symbol	Signal Corps stock No.	Name of part and description	Quan per unit	Running spares	Orgn stock	3d ech	4th ech	5th ech	Depot stock
	3E333	CORD: CC-333.					*	*	*
	4B1109H/24	HANDLE, handset.					*	*	*
	4B1109H/5	MOUTHPIECE: transmitter.					*	*	*
	4B1109C/1	RECEIVER, handset.					*	*	*
	4B1109H/6	RING, clamping: (receiver).					*	*	*
	4B1109H/5/3	RING, clamping: (transmitter).					*	*	*
	4B1109H/12	SPRING, contact: (center, receiver).					*	*	*
	4B1109H/13	SPRING, contact: (outer, receiver).					*	*	*
	4B1109H/14	SPRING, contact: (center, transmitter).					*	*	*
	4B1109H/15	SPRING, contact: (outer, transmitter).					*	*	*
	3Z9650	SWITCH ASSEMBLY ("Push to Talk").					*	*	*

* Indicates stock available.

17. MAINTENANCE PARTS LIST FOR TELEPHONE TP-9 (contd).

Ref symbol	Signal Corps stock No.	Name of part and description	Quan per unit	Running spares	Orgn stock	3d ech	4th ech	5th ech	Depot stock
	4B1109C/3	TRANSMITTER, handset.					*	*	*
		Miscellaneous Hardware							
	6L6440-3.59	SCREW, machine: FH; #4-40 x 3/16"; (secures switch to handle).					*	*	*
	6L6448-3.20	SCREW, machine: Fil Bind H; #4-48 x 3/16"; (connects Terminals TM-163 in handle).					*	*	*
		HANDSET TS-9-E, N, O, U, AA, AC (Contelco)							
	4B1109E/20	CAP, receiver.					*	*	*
	3E333	CORD: CC-333.					*	*	*
	4B1109E/32	HANDLE, handset.					*	*	*
	4B1109E/5/1	MOUTHPIECE: transmitter.					*	*	*
	4B1109E/1	RECEIVER, handset.					*	*	*

* Indicates stock available.

17. MAINTENANCE PARTS LIST FOR TELEPHONE TP-9 (contd).

Ref symbol	Signal Corps stock No.	Name of part and description	Quan per unit	Running spares	Orgn stock	3d ech	4th ech	5th ech	Depot stock
	4B1109E/5/3	RING, clamping: (transmitter).					*	*	*
	4B1109E/5/2	SCREEN: transmitter.					*	*	*
	4B1109E/24	SPRING, contact: (center, receiver).					*	*	*
	4B1109E/25	SPRING, contact: (outer, receiver).					*	*	*
	4B1109E/26	SPRING, contact: (center, transmitter).					*	*	*
	4B1109E/23	SPRING, contact: (outer, transmitter).					*	*	*
	3Z9650	SWITCH ASSEMBLY ("Push to Talk").					*	*	*
	4B1109E/3	TRANSMITTER, handset.					*	*	*
		Miscellaneous Hardware							
	6L6440-3.59	SCREW, machine: FH; #4-40 x 3/16"; (secures switch to handle).					*	*	*

* Indicates stock available.

17. MAINTENANCE PARTS LIST FOR TELEPHONE TP-9 (contd).

Ref symbol	Signal Corps stock No.	Name of part and description	Quan per unit	Running spares	Orgn stock	3d ech	4th ech	5th ech	Depot stock
	6L6540-3.8	SCREW, machine: Bind H; # 5-40 x 3/16"; (connects Terminals TM-163 in handle).					*	*	*
		HANDSET TS-9-F (WECo)							
	4B1109F/20	CAP, receiver.					*	*	*
	4B1109F/19	CAP, transmitter.					*	*	*
	3E333	CORD: CC-333.					*	*	*
	4B1109F/24	HANDLE, handset.					*	*	*
	4B1109F/1	RECEIVER, handset.					*	*	*
	4B1109F/12	SPRING, contact: (center, receiver).					*	*	*
	4B1109F/13	SPRING, contact: (outer, receiver).					*	*	*
	4B1109F/14	SPRING, contact: (center, transmitter).					*	*	*

* Indicates stock available.

17. MAINTENANCE PARTS LIST FOR TELEPHONE TP-9 (contd).

Ref symbol	Signal Corps stock No.	Name of part and description	Quan per unit	Running spares	Orgn stock	3d ech	4th ech	5th ech	Depot stock
	4B1109F/15	SPRING, contact: (outer, transmitter).					*	*	*
	3Z9650	SWITCH ASSEMBLY ("Push to Talk").					*	*	*
	4B1109F/3	TRANSMITTER, handset.					*	*	*
		Miscellaneous Hardware							
	6L6540-3.10	SCREW, machine: F Fil H; #5-40 x 3/16"; (connects Terminals TM-163 in handle).					*	*	*
	6L6440-3.59	SCREW, machine: FH; #4-40 x 3/16"; (secures switch to handle).					*	*	*
		HANDSET TS-9-G, L, T, V, AE, AJ (Holtzer)							
	4B1109G/20	CAP, receiver.					*	*	*
	4B1109G/19	CAP, transmitter.					*	*	*
	3E333	CORD: CC-333.					*	*	*

* Indicates stock available.

17. MAINTENANCE PARTS LIST FOR TELEPHONE TP-9 (contd).

Ref symbol	Signal Corps stock No.	Name of part and description	Quan per unit	Running spares	Orgn stock	3d ech	4th ech	5th ech	Depot stock
	4B1109G/24	HANDLE, handset.					*	*	*
	4B1109G/1	RECEIVER, handset.					*	*	*
	4B1109G/25	SPRING, contact: (center, receiver).					*	*	*
	4B1109G/29	SPRING, contact: (outer, receiver).					*	*	*
	4B1109G/26	SPRING, contact: (center, transmitter).					*	*	*
	4B1109G/30	SPRING, contact: (outer, transmitter).					*	*	*
	3Z9650	SWITCH ASSEMBLY ("Push to Talk").					*	*	*
	4B1109G/3	TRANSMITTER, handset.					*	*	*
		Miscellaneous Hardware							
	4B1109G/31	SCREW, machine: special; terminal; brass; #6-40 x 3/16"; (connects cords in handle).					*	*	*

* Indicates stock available.

17. MAINTENANCE PARTS LIST FOR TELEPHONE TP-9 (contd).

Ref symbol	Signal Corps stock No.	Name of part and description	Quan per unit	Running spares	Orgn stock	3d ech	4th ech	5th ech	Depot stock
	6L6440-3.59	SCREW, machine: FH; #4-40 x 3/16"; (secures switch to handle).					*	*	*
		HANDSET TS-9-J (Auto Elec)							
	4B1109J/20	CAP, receiver.					*	*	*
	4B1109J/19	CAP, transmitter.					*	*	*
	3E333	CORD: CC-333.					*	*	*
	4B1109J/24	HANDLE, handset.					*	*	*
	4B1109J/1	RECEIVER, handset.					*	*	*
	4B1109J/12	SPRING, contact: (center, receiver).					*	*	*
	4B1109J/13	SPRING, contact: (outer, receiver).					*	*	*
	4B1109J/14	SPRING, contact: (center, transmitter).					*	*	*

* Indicates stock available.

17. MAINTENANCE PARTS LIST FOR TELEPHONE TP-9 (contd).

Ref symbol	Signal Corps stock No.	Name of part and description	Quan per unit	Running spares	Orgn stock	3d ech	4th ech	5th ech	Depot stock
	4B1109J/15	SPRING, contact: (outer, transmitter).					*	*	*
	3Z9650	SWITCH ASSEMBLY ("Push to Talk").					*	*	*
	4B1109J/3	TRANSMITTER, handset.					*	*	*
		Miscellaneous Hardware							
	6L6440-3.59	SCREW, machine: FH; #4-40 x 3/16"; (secures switch to handle).					*	*	*
	6L6540-3.8	SCREW, machine: Bind H; #5-40 x 3/16"; (connects cords in handle).					*	*	*
		HANDSET TS-9-K (Kellogg)							
	4B1109K/20	CAP, receiver.					*	*	*
	3E333	CORD: CC-333.					*	*	*
	4B1109K/24	HANDLE, handset.					*	*	*

* Indicates stock available.

17. MAINTENANCE PARTS LIST FOR TELEPHONE TP-9 (contd).

Ref symbol	Signal Corps stock No.	Name of part and description	Quan per unit	Run-ning spares	Orgn stock	3d 'ech	4th ech	5th ech	Depot stock
	4B1109K/5	MOUTHPIECE: transmitter.					*	*	*
	4B1109K/1	RECEIVER, handset.					*	*	*
	4B1109K/7	RING, clamping: (transmitter).					*	*	*
	3Z9650	SWITCH ASSEMBLY ("Push to Talk").					*	*	*
	4B1109K/3	TRANSMITTER, handset.					*	*	*
		Miscellaneous Hardware							
	6L6440-3.59	SCREW, machine: FH; #4-40 x 3/16"; (secures switch to handle).					*	*	*
	6L6448-3.20	SCREW, machine: Bind H; #4-48 x 3/16"; (connects cords in handle).					*	*	*
	4B1109K/34	FASTENER: stay cord.					*	*	*

* Indicates stock available.

17. MAINTENANCE PARTS LIST FOR TELEPHONE TP-9 (contd).

Ref symbol	Signal Corps stock No.	Name of part and description	Quan per unit	Running spares	Orgn stock	3d ech	4th ech	5th ech	Depot stock
		HANDSET TS-9-R, AF, AL (Fed Tele & Rad)							
	4B1109R/37	BOARD, terminal: (transmitter contact mounting and cord terminating).					*	*	*
	4B1109A.11/20	CAP, receiver.					*	*	*
	4B1109A.11/12	SPRING, contact: (center, receiver).	if equipped with Contelco receiver unit.						
	4B1109E/1	RECEIVER, handset.							
	4B1109A.6/20	CAP, receiver.					*	*	*
	4B1109R/12	SPRING, contact: (center, receiver).	if equipped with WECo receiver unit.				*	*	*
	4B1109F/1	RECEIVER, handset.							
	4B1109A.6/19	CAP, transmitter.					*	*	*

* Indicates stock available.

17. MAINTENANCE PARTS LIST FOR TELEPHONE TP-9 (contd).

Ref symbol	Signal Corps stock No.	Name of part and description	Quan per unit	Running spares	Orgn stock	3d ech	4th ech	5th ech	Depot stock
	3E333	CORD: CC-333.					*	*	*
	4B1109R/24	HANDLE, handset.					*	*	*
	4B1109A.6/13	SPRING, contact: (outer, receiver).					*	*	*
	4B1109R/14	SPRING, contact: (center, transmitter).					*	*	*
	4B1109A.6/15	SPRING, contact: (outer, transmitter).					*	*	*
	3Z9650	SWITCH ASSEMBLY ("Push to Talk").					*	*	*
	4B1109E/3	TRANSMITTER, handset: Contelco.					*	*	*
	4B1109F/3	TRANSMITTER, handset: WECo.					*	*	*

Either transmitter unit can be used.

* Indicates stock available.

17. MAINTENANCE PARTS LIST FOR TELEPHONE TP-9 (contd).

Ref symbol	Signal Corps stock No.	Name of part and description	Quan per unit	Running spares	Orgn stock	3d ech	4th ech	5th ech	Depot stock
		Miscellaneous Hardware							
	6L6440-3.59	SCREW, machine: FH; #4-40 x 3/16"; (secures switch to handle).					*	*	*
	6L6448-3.5	SCREW, machine: RH; #4-48 x 3/16"; (receiver contact mounting).					*	*	*
	6L6440-3.5	SCREW, machine: RH; #4-40 x 3/16"; (connects cords to handle).					*	*	*
	6L7932-10.49S	SCREW, self tapping: cadmium-plated; #6-32 x 5/8"; (terminal block mounting and stay cord fastening).					*	*	*

* Indicates stock available.

18. VACUUM TUBE SOCKET WIRING DIAGRAM.

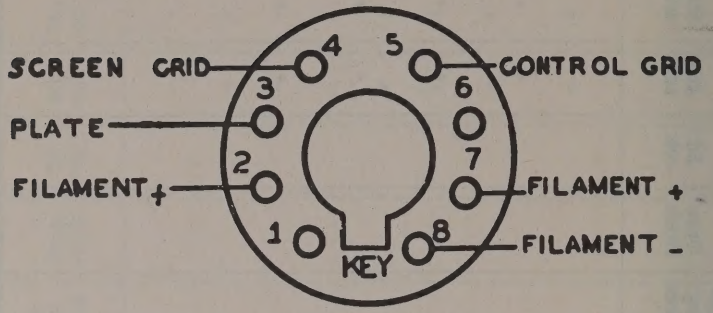

TABLE OF EXTERNAL CONNECTIONS

	V 1	V 2	V 3
TERM 1			
2	7 ON V1		
3	2 ON K1	4 ON K1 AND C4	3 ON T4
4	3 ON K1	R10 AND C2	R9 AND C3
5	C1 AND R7	R8	C4 AND R11
6			
7	7 ON V2	7 ON V3	2 ON BAT. TERM BOARD THRU 12 ON CHASSIS T. B.
8	12 ON S1 4 ON T3 AND GROUND	12 ON S1 4 ON T3 AND GROUND	12 ON S1 4 ON T3 AND GROUND

TL 53152-S

19. POINT TO POINT VOLTAGES.

From Term	On Part	To Term	On Part	SW	Pos.	Remarks	Voltage
3	V1	Gnd	Chassis	S1	Open	Handset butterfly switch unoperated	65
3	V1	Gnd	Chassis	S1	Open	Handset butterfly switch operated	67
4	V1	Gnd	Chassis	S1	Open		67
6	T1	7	V1	S1	Open		2.2
2	V1	Gnd	Chassis	S1	Open		1.5
2	T1	3	T1			Handset butterfly switch operated	.1
2	Cross	C6	Capacitor			Handset butterfly switch operated	2.4
Gnd	Chassis	7	V2	S1	Open	Gain control full off	1.5
3	V2	Gnd	Chassis	S1	Open	Handset butterfly switch unoperated	50
4	V2	Gnd	Chassis	S1	Open	Handset butterfly switch unoperated	7
7	V2	8	V2	S1	Open		1.32
Gnd	Chassis	7	V3	S1	Open		1.5
3	V3	Gnd	Chassis	S1	Open		40
4	V3	Gnd	Chassis	S1	Open		9
7	V3	8	V3	S1	Open		1.32

20. POINT TO POINT RESISTANCE VALUES.

From Term	On Part	To Term	On Part	SW	Pos.	Remarks	Ohms
Binding Post	Panel	Binding Post	Panel	S1 S2	Closed Sig.		1300
Binding Post	Panel	Binding Post	Panel	S1 S2	Closed Bell		1300
4	T2	3	T2	S1	Closed		40
3	V1	4	V1			Armature of Relay K1 in non-operate position	0
3	V1	4	V1			Armature of Relay K1 in operate position	1250
8	V1	Gnd	Chassis				0
5	V1	Gnd	Chassis	S1	Open		57000
5	T1	6	T1				22
1	T1	2	T1	S1	Open		24
2	T1	3	T1			Handset Butterfly Switch non-operated	2.5
3	T1	4	T1				22.5

20. POINT TO POINT RESISTANCE VALUES (contd.)

From Term	On Part	To Term	On Part	SW	Pos.	Remarks	Ohms
1	T3	2	T3				33
5	V2	Gnd	Chassis			Gain control full on Disconnect all wires on Term 3 of T3	400000
5	V2	Gnd	Chassis			Gain control full off Disconnect all wires on Term 3 of T3	150000
3	T3	4	T3			Disconnect all wires on Term 3 of T3	1790
7	V1	7	V2				0
7	V2	7	V3				0
8	V2	Gnd	Chassis				4
4	V2	4	V3				740000
3	V2	2	L1			Armature of Relay K1 in unoperated position	22000
1	L1	2	L1			Armature of Relay K1 in unoperated position	820
3	V2	1	L1			Armature of Relay K1 in operated position	0
5	V3	Gnd	Chassis				470000
3	V3	1	T4				1580
8	V3	Gnd	Chassis				4
4	T4	5	T4	S1	Open		55
1	K1	5	K1				50

21. RESISTOR COLOR CODE.

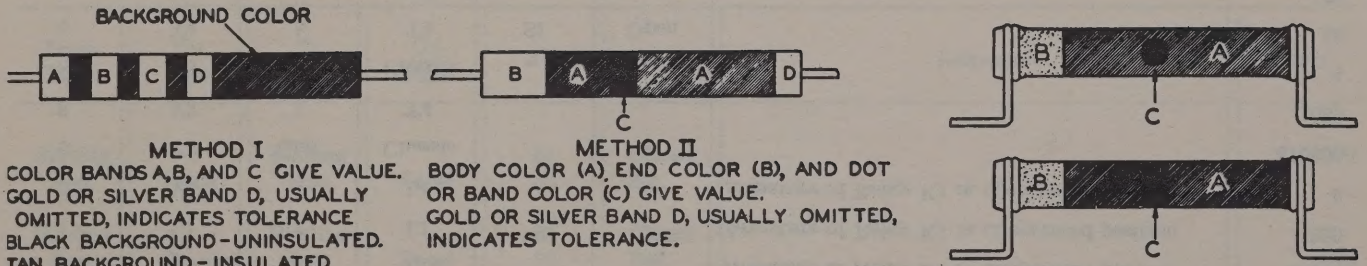

METHOD I

COLOR BANDS A, B, AND C GIVE VALUE.
GOLD OR SILVER BAND D, USUALLY OMITTED, INDICATES TOLERANCE
BLACK BACKGROUND - UNINSULATED.
TAN BACKGROUND - INSULATED

METHOD II

BODY COLOR (A), END COLOR (B), AND DOT OR BAND COLOR (C) GIVE VALUE.
GOLD OR SILVER BAND D, USUALLY OMITTED, INDICATES TOLERANCE.

COLOR	FIGURE
BLACK	0
BROWN	1
RED	2
ORANGE	3
YELLOW	4
GREEN	5
BLUE	6
VIOLET	7
GRAY	8
WHITE	9

COLOR A GIVES FIRST FIGURE OF RESISTOR VALUE.

COLOR B GIVES SECOND FIGURE OF RESISTOR VALUE.

COLOR C GIVES NUMBER OF CIPHERS FOLLOWING THE FIRST TWO FIGURES.

COLOR D: GOLD BAND INDICATES ±5% TOLERANCE.
SILVER BAND INDICATES ±10% TOLERANCE.
NO BAND INDICATES STANDARD ±20% TOLERANCE.

EXAMPLES

RESISTANCE OHMS	COLOR CODE			
	A	B	C	D
43000 ±5%	YELLOW	ORANGE	ORANGE	GOLD
3900 ±10%	ORANGE	WHITE	RED	SILVER
68 ±20%	BLUE	GRAY	BLACK	NONE

TL53153-S

22. CAPACITOR COLOR CODE.

CAPACITOR COLOR CODE

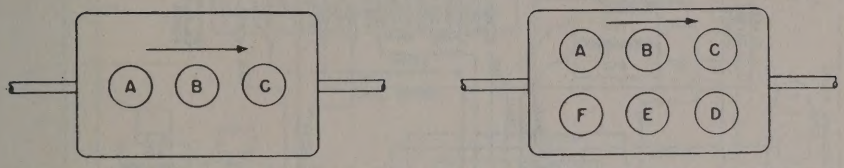

ONE ROW DOTS	COLOR	TWO ROWS OF DOTS
DOT A	INDICATES FIRST SIGNIFICANT FIGURE OF CAPACITANCE VALUE IN MICROMICROFARADS	DOT A
DOT B	INDICATES SECOND SIGNIFICANT FIGURE	DOT B
	INDICATES THIRD SIGNIFICANT FIGURE	DOT C
DOT C	INDICATES MULTIPLIER	DOT D
USUAL TOLERANCE ±20%	INDICATES TOLERANCE IN PER CENT OF THE NOMINAL CAPACITANCE VALUE. IF NO COLOR APPEARS TOLERANCE IS 20%	DOT E
RATED VOLTAGE USUALLY 500 VOLTS	INDICATES THE RATED VOLTAGE	DOT F

COLOR	SIGNIFICANT FIGURE	MULTIPLIER	TOLERANCE PER CENT (IF GIVEN)	RATED VOLTAGE (IF GIVEN)
BLACK	0	1		
BROWN	1	10	1	100
RED	2	100	2	200
ORANGE	3	1000	3	300
YELLOW	4	10,000	4	400
GREEN	5	100,000	5	500
BLUE	6	1,000,000	6	600
VIOLET	7	10,000,000	7	700
GRAY	8	100,000,000	8	800
WHITE	9	1,000,000,000	9	900
GOLD		0.1	5	1,000
SILVER		0.01	10	2,000
NO COLOR			20	500

TL 35619

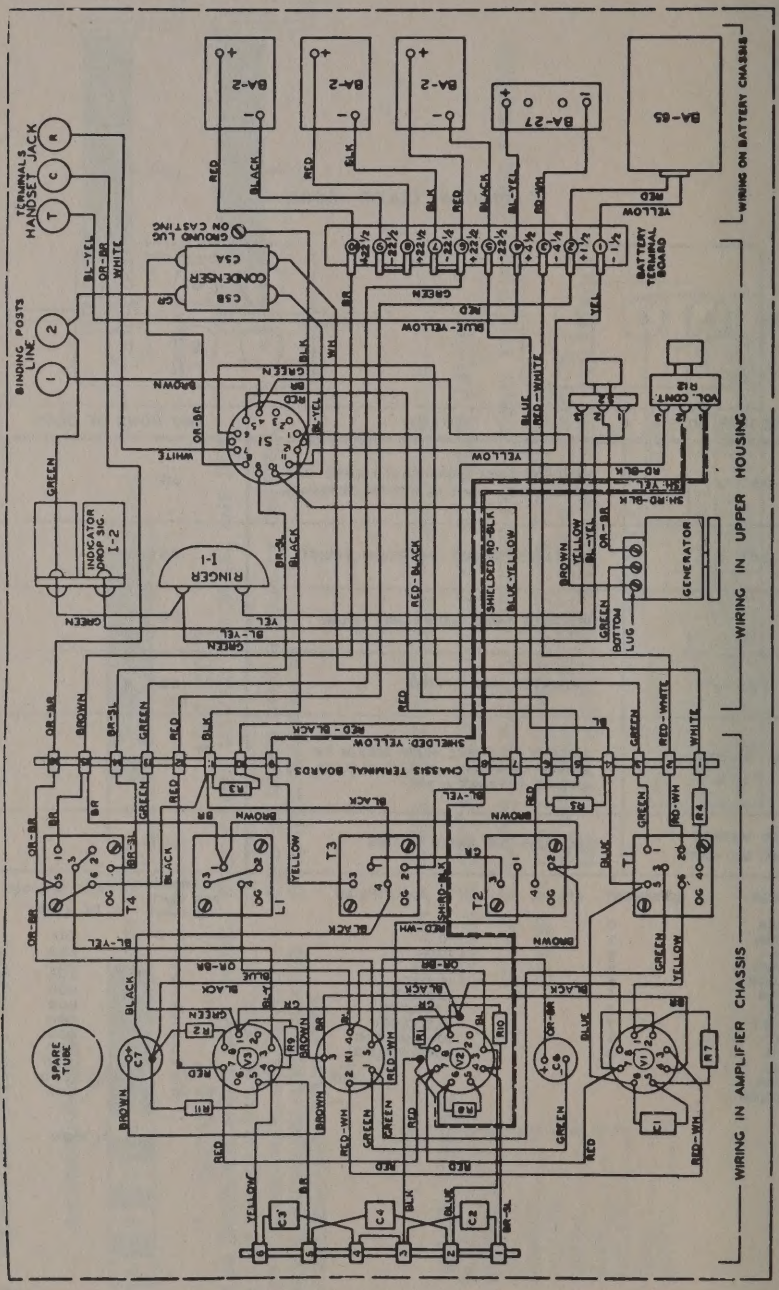

Figure 12. Wiring diagram.

☆U. S. GOVERNMENT PRINTING OFFICE : O—1951

WAR DEPARTMENT TECHNICAL MANUAL

TM 11-2059

TELEPHONE TP-9

WAR DEPARTMENT 9 DECEMBER 1944

RESTRICTED. *DISSEMINATION OF RESTRICTED MATTER.* No person is entitled solely by virtue of his grade or position to knowledge or possession of classified matter. Such matter is entrusted only to those individuals whose official duties require such knowledge or possession. (See also paragraph 23*b*, AR 380-5, 15 March 1944.)

TABLE OF CONTENTS

		Paragraph	Page
SECTION I.	Description		
	General	1	1
	List of component parts	2	3
II.	Installation and operation.		
	Unpacking	3	5
	Preparation for use	4	5
	Installation	5	7
	Operation	6	7
III.	Functioning of parts.		
	Theoretical considerations	7	7
	Circuit features	8	10
IV.	Maintenance.		
	Inspection	9	15
	Servicing	10	15
	Replacement of parts	11	17
	Adjustments	12	20
	Lubrication	13	22
	Moistureproofing and fungiproofing	14	24
	Trouble-shooting procedure	15	26
	Trouble-shooting chart	16	28
V.	Supplementary data.		
	Maintenance parts list	17	33
	Vacuum tube socket wiring diagram	18	68
	Point-to-point voltage measurements	19	69
	Point-to-point resistance measurements	20	70
	Resistor color code	21	72
	Capacitor color code	22	73

LIST OF ILLUSTRATIONS

Fig. No.	*Title*	*Page*
1	Telephone TP-9	VI
2	Telephone TP-9, upper housing open	2
3	Telephone TP-9, lower housing removed	4
4	Operating instructions label	6
5	Amplifier gain characteristics	10
6	Schematic diagram	12
7	Telephone TP-9, battery and amplifier compartments open	16
8	Telephone TP-9, amplifier chassis removed	18
9	Visual signal	21
10	Generator GN-38-B, lubrication points	23
11	Masking for moistureproofing and fungiproofing	25
12	Wiring diagram	74

LIST OF ILLUSTRATIONS

Fig. No.	Title	Page
1	Telephone TP-3	1
2	Telephone TP-3, upper housing open	2
3	Telephone TP-3, lower housing removed	4
4	Operating instructions label	6
5	Amplifier gain characteristics	10
6	Schematic diagram	12
7	Telephone TP-3, battery and amplifier compartments open	16
8	Telephone TP-3, amplifier chassis removed	18
9	Visual signal	21
10	Generator GN-58-B, tube details points	26
11	Sensitive for monitoring set and frequencies	33
12	Wiring diagram	74

DESTRUCTION NOTICE

WHY — To prevent the enemy from using or salvaging this equipment for his benefit.

WHEN — When ordered by your commander.

HOW — 1. Smash — Use sledges, axes, handaxes, pickaxes, hammers, crowbars, heavy tools.

2. Cut — Use axes, handaxes, machetes.

3. Burn — Use gasoline, kerosene, oil, flame throwers, incendiary grenades.

4. Explosives — Use firearms, grenades, TNT.

5. Disposal — Bury in slit trenches, fox holes, other holes. Throw in streams. Scatter.

USE ANYTHING IMMEDIATELY AVAILABLE FOR DESTRUCTION OF THIS EQUIPMENT.

WHAT — 1. Smash — Housing, handset, generator, vacuum tubes.

2. Cut — Coils, transformers, chassis, wiring.

3. Burn — Transformers, handset, wiring.

4. Bend — Generator, housing, chassis.

5. Bury or scatter — All parts.

DESTROY EVERYTHING

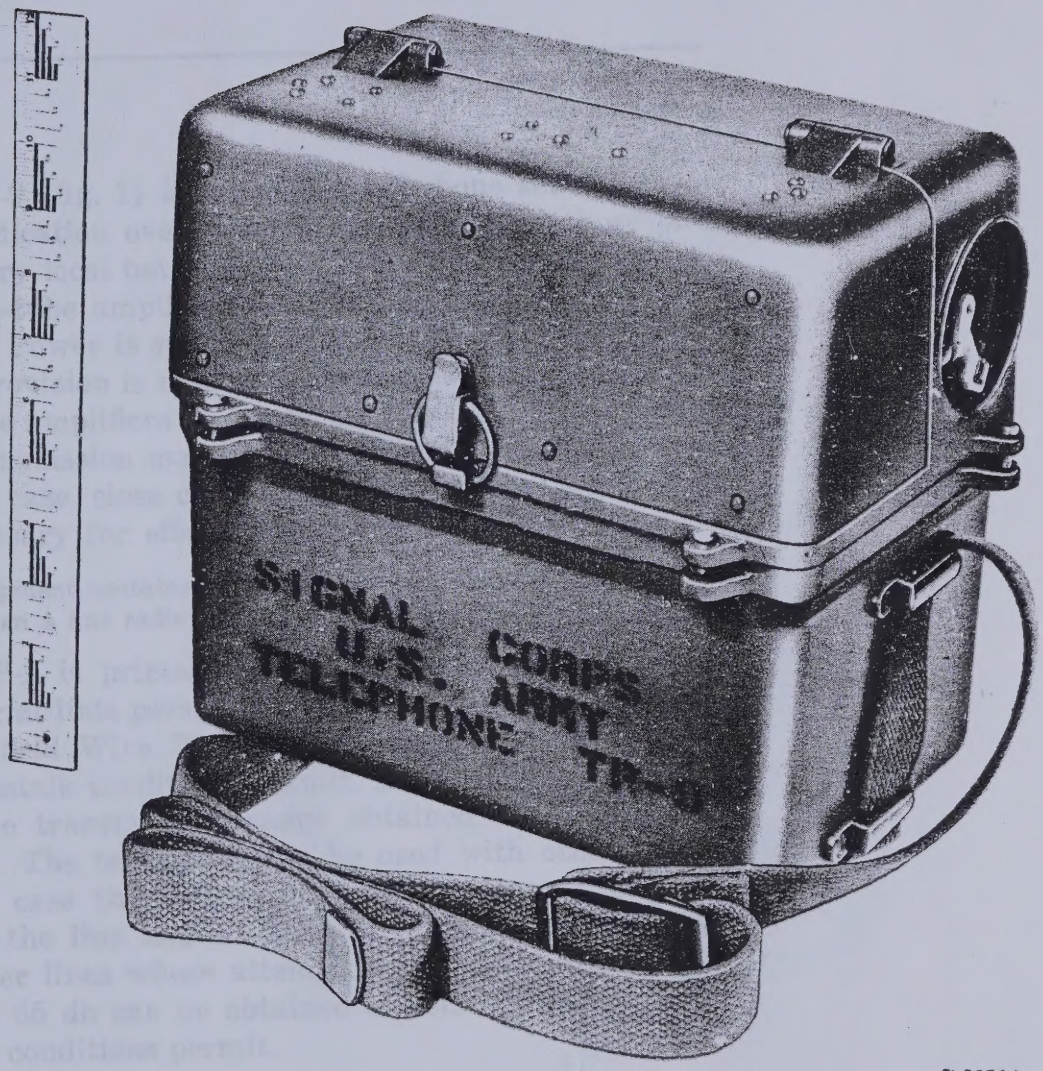

Figure 1. Telephone TP-9.

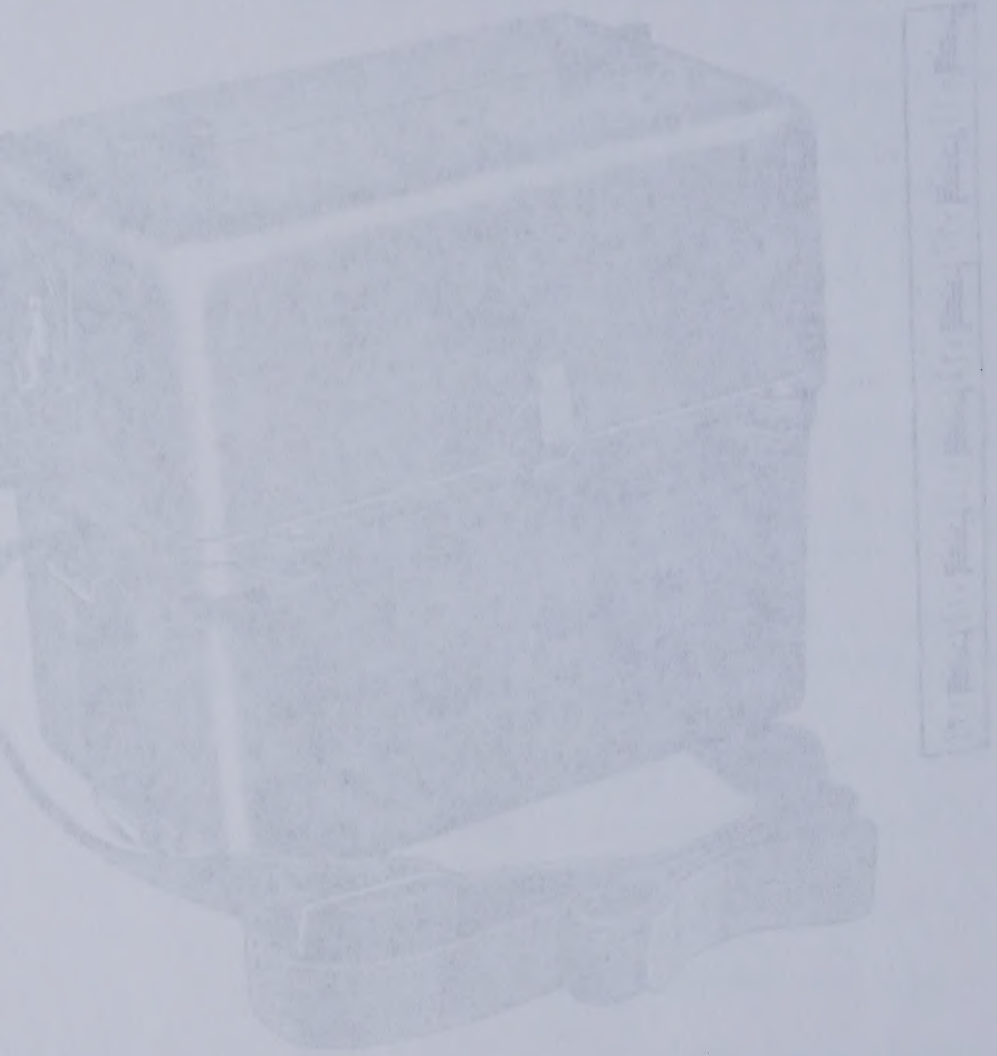

SECTION I

DESCRIPTION

1. GENERAL.

a. Telephone TP-9 (fig. 1) is a portable telephone set designed to provide communication over greater distances than those obtained with ordinary local battery sets. This is made possible by the use of vacuum-tube amplifiers in both the transmitting and receiving circuits. Power is supplied by batteries mounted inside the instrument. Provision is made so that the telephone may also be used without the amplifiers as a local battery set. When using the amplifiers, transmission may be effected in only one direction at a time. In this case, close cooperation of personnel using the equipment is necessary for efficient operation.

NOTE: This equipment contains vacuum tubes and must be handled with the care given a fine radio set.

b. Telephone TP-9 is primarily intended for use at the terminals and at intermediate points between terminals of a two-wire line composed of field Wire W-110-B. When used in this way, and noise and crosstalk conditions permit, the telephone approximately doubles the transmission range obtained with ordinary local battery sets. The telephone may be used with other facilities, and in this case the transmission range depends on the characteristics of the line and weather conditions. Satisfactory communication over lines whose attenuation does not exceed approximately 60 to 65 db can be obtained if noise, crosstalk, and other interference conditions permit.

c. Telephone TP-9 is provided with a bell for audible signaling and with a visual signal for noiseless signaling. A switch is provided to select either type of signaling method. The visual signal is designed so that it may be used in darkness. When ringing current is received, the signal leaf flies up, and the operator can note its position by passing his hand over the leaf.

SECTION I

DESCRIPTION

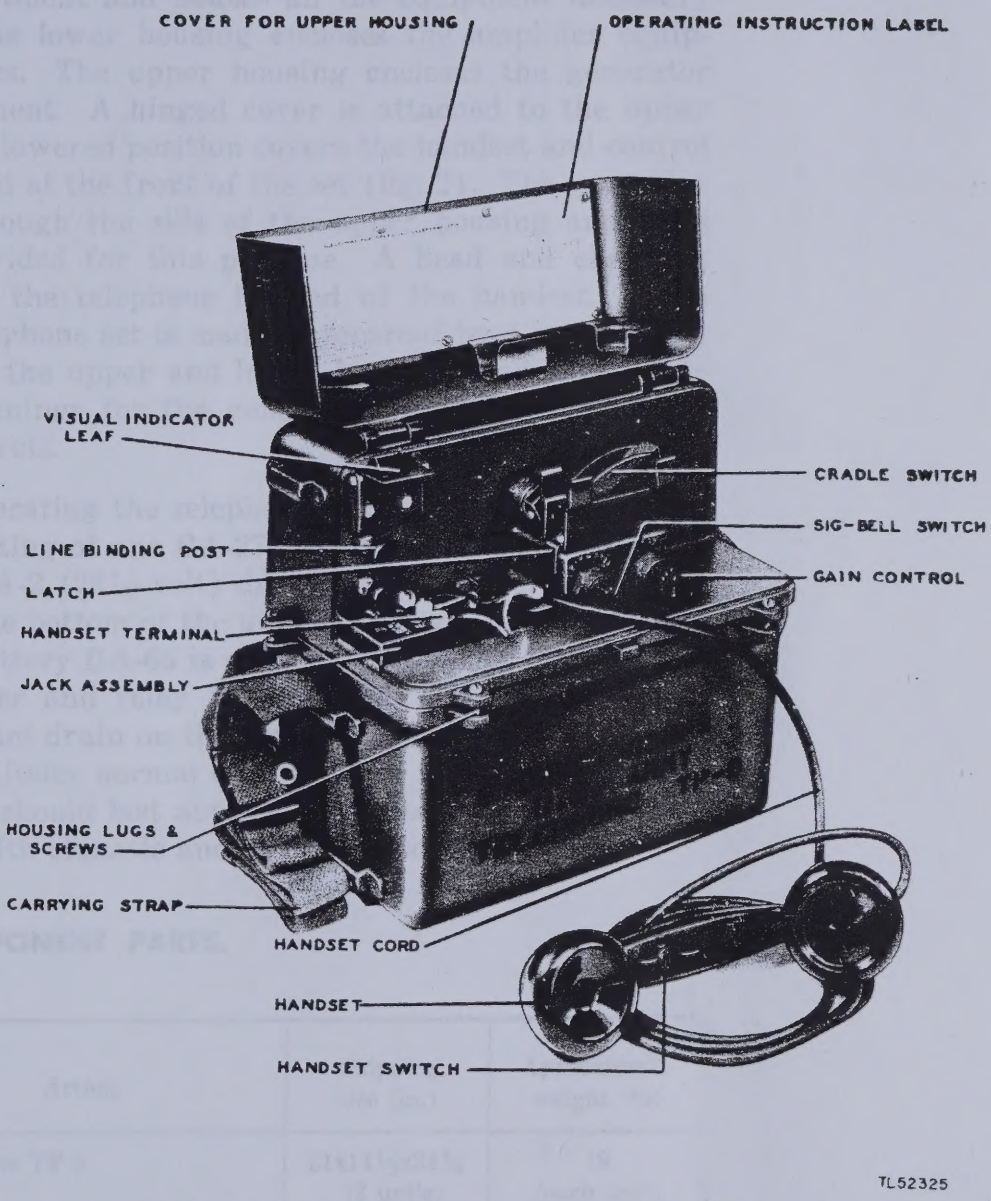

Figure 2. Telephone TP-9, upper housing open.

d. The telephone consists of a cast aluminum chassis 12½ inches long by 7¾ inches wide by 10¾ inches high. It weighs approximately 19 pounds less batteries. The chassis consists of an upper and lower compartment and houses all the equipment necessary for operation. The lower housing encloses the amplifier equipment and batteries. The upper housing encloses the generator and ringer equipment. A hinged cover is attached to the upper housing and in its lowered position covers the handset and control equipment mounted at the front of the set (fig. 2). The generator crank extends through the side of the upper housing and folds into a recess provided for this purpose. A head and chest set can be used with the telephone instead of the handset. When assembled, the telephone set is made waterproof by a composition gasket separating the upper and lower housings and by gaskets protecting the openings for the generator crank, binding posts, switches, and controls.

e. Power for operating the telephone is derived from a battery complement consisting of one BA-27 (4½-volt), one BA-65 (1½-volt), and three BA-2 (22½-volt) dry-cell batteries, mounted in a hinged frame at the bottom of the unit. The drain on the 1½-volt filament supply Battery BA-65 is about 200 ma. The drain on the 4½-volt transmitter and relay Battery BA-27 is approximately 50 ma. The total net drain on the three 22½-volt Batteries BA-2 is about 5½ ma. Under normal conditions of intermittent operation, the batteries should last about 3 or 4 weeks. However, this period will vary with climatic and operating conditions.

2. LIST OF COMPONENT PARTS.

Quantity	Article	Shipping size (in.)	Approximate weight (lb)
1	Telephone TP-9	21x14½x24¾ (2 units)	19 (each unit)
2	Technical Manual TM 11-2059	—	—
3	Battery BA-2	—	1
1	Battery BA-27	—	½
1	Battery BA-65	—	1

Note: Batteries must be ordered separately.

947407 O - 51 - 2

d. The telephone consists of a cast aluminum chassis 12½ inches long by 7¾ inches wide by 10¾ inches high. It weighs approximately 19 pounds less batteries. The chassis consists of an upper and lower compartment and houses all the equipment necessary for operation. The lower housing encloses the amplifier equipment and batteries. The upper housing encloses the generator and ringer equipment. A hinged cover is attached to the upper housing and in its lowered position covers the handset and control equipment mounted at the front of the set (fig. 2). The generator crank extends through the side of the upper housing and folds into a recess provided for this purpose. A head and chest set can be used with the telephone instead of the handset. When assembled, the telephone set is made waterproof by a composition gasket separating the upper and lower housings and by gaskets protecting the openings for the generator crank, binding posts, switches, and controls.

e. Power for operating the telephone is derived from a battery complement consisting of one BA-27 (1½-volt), one BA-65 (1½-volt), and three BA-2 (22½-volt) dry-cell batteries, mounted in a hinged frame at the bottom of the unit. The drain on the 1½-volt filament supply Battery BA-65 is about 200 ma. The drain on the 4½-volt transmitter and relay Battery BA-27 is approximately 60 ma. The total condition on the three 22½-volt Batteries BA-2 is about 6½ ma. Under normal conditions of intermittent operation, the batteries should last about 3 or 4 weeks. However this period will vary with climatic and operating conditions.

2. LIST OF COMPONENT PARTS.

Quantity	Article	Shipping size (in.)	Approximate weight (lb)
1	Telephone TP-9	21x14½x8¾ (2 units)	19 (each unit)
2	Technical Manual TM 11-2053	—	—
3	Battery BA-2	—	1
1	Battery BA-27	—	¾
1	Battery BA-65	—	1

Note: Batteries must be ordered separately.

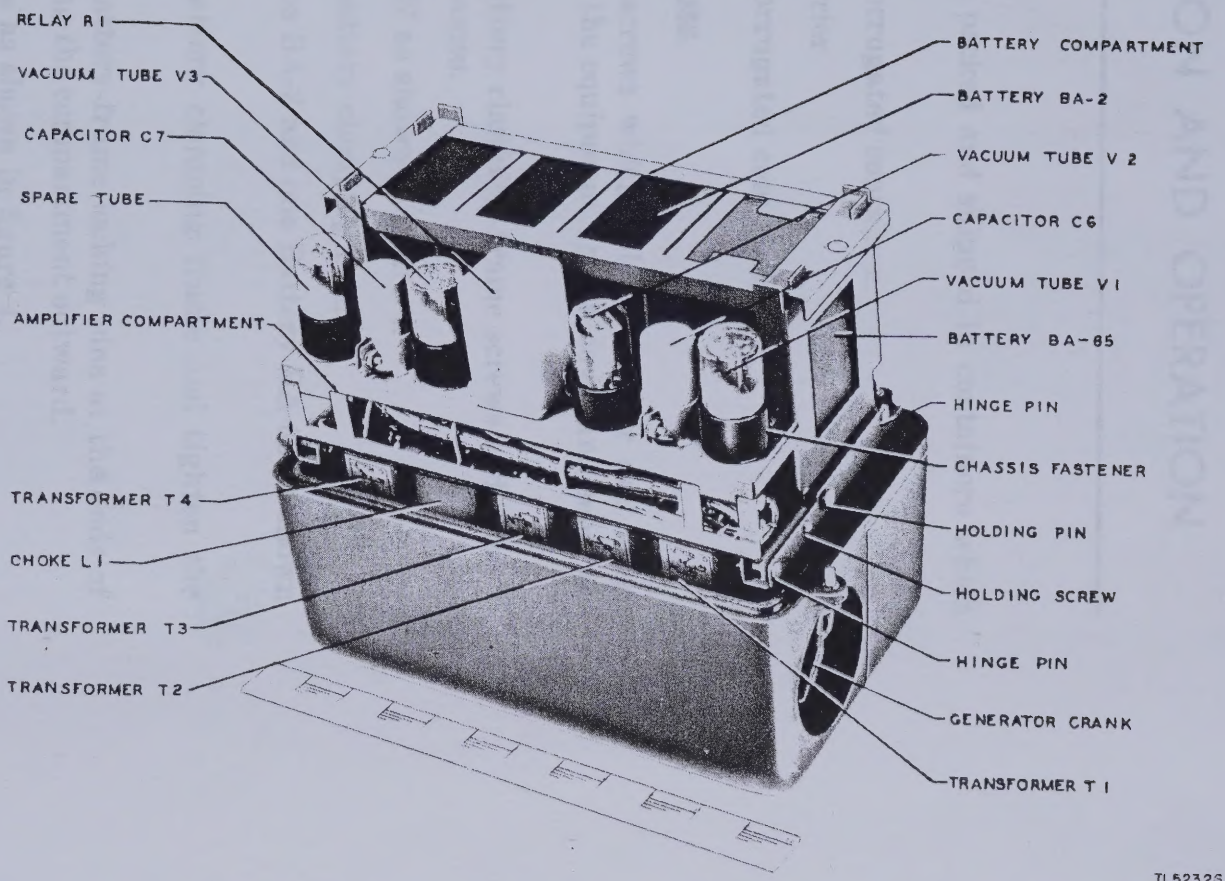

Figure 3. Telephone TP-9, lower housing removed.

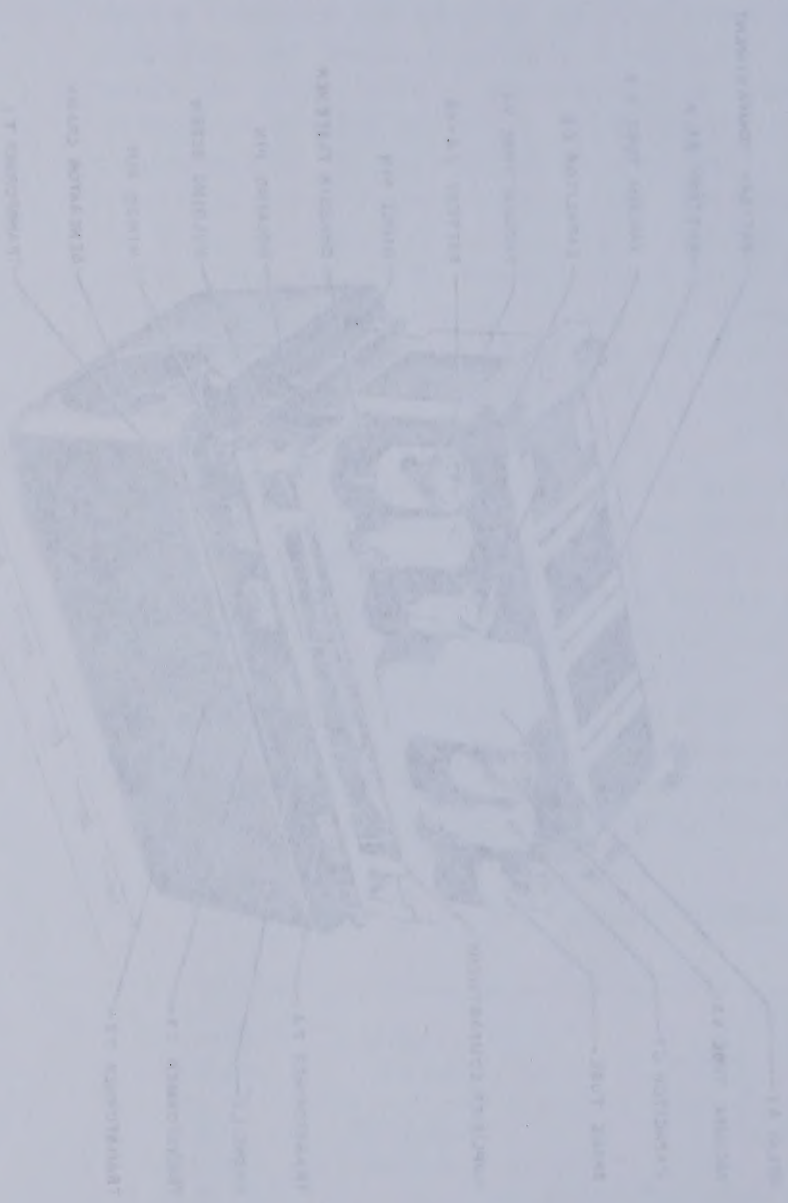

SECTION II
INSTALLATION AND OPERATION

---

3. UNPACKING.

The individual unit is packed and shipped in containers which are moistureproof.

a. Remove the outer corrugated container.

b. Remove the foil barrier.

c. Remove the inner corrugated container.

4. PREPARATION FOR USE.

a. Unfasten the four screws which hold the upper and lower housings together. Turn the equipment upside down and separate the housings.

b. Unfasten the two battery clamping-frame screws and remove both battery clamping frames.

c. Install Battery BA-27 as shown in figure 4.

d. Replace the center battery clamping frame.

e. Install three Batteries BA-2 and one Battery BA-65 as shown in figure 4.

f. Replace the other battery clamping frame and tighten the battery-frame screws.

g. Disengage the two battery-frame locking pins at the ends of the compartment and swing the compartment outward.

h. Connect the batteries as shown in figure 4.

NOTE: Battery BA-65 has a two-prong connector-plug receptacle. To insure correct polarity, be sure that the larger pin of the plug is inserted in the larger hole of the battery receptacle.

CAUTION: When not using the telephone, lock the cradle switch in the down position or current will be drawn from the batteries. Lock handset cradle switch by pushing the cradle switch down and moving the latch located beneath the cradle switch to the left.

DIRECTIONS FOR OPERATING TELEPHONE TP-9

1. Preparation for Use

a. Unfasten the four screws which hold the upper and lower housings together. Turn equipment upside down and separate housings.

b. Unfasten the two battery clamping frame screws and remove both battery clamping frames.

c. Install Battery BA-27 as shown in the diagram to the right.

d. Replace the center battery clamping frame.

e. Install three Battery BA-2 and one Battery BA-65 as shown in the diagram.

f. Replace the other battery clamping frame and tighten battery frame screws.

g. Disengage the two battery frame locking pins at the ends of the compartment and swing the compartment outward.

h. Connect batteries as shown in the diagram.

Note: Battery BA-65 has a two-prong connector plug receptacle. To insure correct polarity, make sure that the larger pin of the plug is inserted in the larger hole of the battery receptacle.

Caution: When not using instrument, lock cradle switch in the down position, otherwise current will be drawn from the batteries. Lock handset cradle switch by pushing cradle switch down and moving latch, located beneath cradle switch, to the left.

i. Put housings together and fasten screws.

j. Test amplifiers as follows.

1. Remove handset from cradle.
2. Turn GAIN control to maximum clockwise position.
3. Release cradle switch lever. Push latch to the right to release cradle switch lever. The cradle switch lever should rise.
4. Place telephone receiver to ear and tap side of housing. A slight amount of microphonic noise should be heard in receiver.
5. Press handset switch and blow into transmitter. Side-tone should be heard in receiver.

2. Installation

a. To use Telephone TP-9 at the end of a line, connect line wires to binding posts.

b. To use Telephone TP-9 at intermediate points, bridge the telephone across the line without interrupting the continuity of the circuit. Strip insulation from line wires and make loop connection to binding posts. DO NOT CUT LINE WIRES.

3. Operation

a. Signaling

1. To signal another telephone on the line, turn generator crank briskly in a clockwise direction.

2. To receive a signal, select the desired type of signal as follows:

a. For an audible signal, set SIG. BELL switch to BELL.

b. For a visual signal, set SIG. BELL switch to SIG.

NOTE: RESTORE VISUAL SIGNAL LEAF MANUALLY IMMEDIATELY AFTER EACH RECEIVED SIGNAL SO THAT BREAK IN SIGNALS FROM ANOTHER STATION CAN BE RECEIVED.

b. Conversation

1. Without amplification

a. Remove handset from cradle. Lock handset cradle switch by pushing cradle switch down and moving latch to the left.

b. To listen, place receiver to ear.

c. To talk, operate butterfly switch in handset.

2. With amplification

a. Turn GAIN control to about mid-position.

b. Remove handset from cradle. Release cradle switch by pushing latch to the right, allowing cradle lever to rise.

c. To Talk.

Note: Where Telephone TP-9 is used with amplifiers, it is not possible to talk and listen simultaneously. Unusually close cooperation between talker and listener is necessary for efficient operation.

1. Send ringing signal to establish communication with the other station.

2. Wait for the other station to answer, keeping handset butterfly switch in released position.

3. When the other station answers, operate handset butterfly switch and talk.

d. To listen, keep butterfly switch on handset in released position.

Note: During conversation, adjust GAIN control until best volume is obtained.

e. To interrupt talker at another station:

1. Transmit a ring by turning generator crank. This will operate visual signal or bell at the other station.

2. Upon receiving the signal, the person talking from the other station must immediately stop talking and release handset butterfly switch.

3. As soon as the other station has stopped talking, operate handset butterfly switch and start talking.

4. Shipping and Storage

a. Remove batteries from battery compartment if Telephone TP-9 is to be left idle for more than a few days, is put in storage, or is packed for shipment.

b. Under any of the conditions specified in "a" above, lock the cradle switch by pushing the cradle switch down and moving latch to the left.

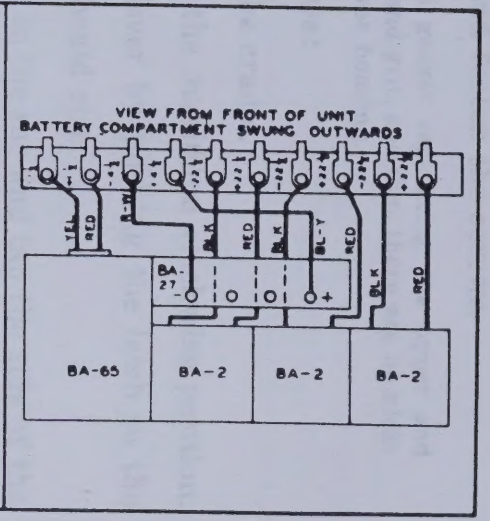

Figure 4. Operating instructions label.

TL52327

i. Put the housing together and fasten the screws.

CAUTION: Make sure that the gasket separating the upper and lower housings is free from dirt and grit, and that there are no nicks in the V-edged facing on the lower housing.

j. Test the amplifiers as follows:

(1) Remove the handset from the cradle.

(2) Turn the GAIN control to the maximum clockwise position.

(3) Release the cradle-switch lever by pushing the latch to the right. The cradle-switch lever should rise.

(4) Place the telephone receiver to the ear and tap the side of the housing. Microphonic noise should be heard in the receiver. Press the handset switch and blow into the transmitter. Side-tone should be heard in the receiver.

5. INSTALLATION.

a. To use Telephone TP-9 at the end of a line, connect the line wires to the binding posts.

b. To use Telephone TP-9 at intermediate points, bridge the telephone across the line without interrupting the continuity of the circuit. Strip the insulation from the line wires and make a loop connection to the binding posts. *Do not cut the line wires.*

6. OPERATION

a. Signaling. To signal another telephone on the line, turn the generator crank briskly in a clockwise direction. To receive a signal, select the desired type of signal as follows. For an audible signal, set the SIG-BELL switch to BELL. For a visual signal, set the SIG-BELL switch to SIG.

b. Conversation. (1) WITHOUT AMPLIFICATION.

(a) Remove the handset from the cradle. Lock the handset cradle switch by pushing the cradle switch down and moving the latch to the left.

(b) To talk, operate the handset switch. To listen, release the switch.

(2) WITH AMPLIFICATION.

(a) Turn the GAIN control to about mid-position.

(b) Remove the handset from the cradle. Release the cradle switch by pushing the latch to the right, allowing the cradle lever to rise.

(c) To talk, send a ringing signal to establish communication with the other station. Wait for the other station to answer, *keeping the handset butterfly switch in the released position.* After the other station answers, operate the handset butterfly switch and talk.

NOTE: When Telephone TP-9 is used with amplifiers, it is not possible to talk and listen simultaneously. Close cooperation between the talker and listener is necessary for efficient operation.

(d) To listen, keep the butterfly switch on the handset in the released position. During conversation, adjust the GAIN control until the best volume is obtained.

(e) To interrupt the talker at the other station, transmit a ringing signal by turning the generator crank. This will operate the bell or visual signal at the other station. Upon receiving the signal, the person talking from the other station must immediately stop talking and release the handset butterfly switch. As soon as the other station has stopped talking, operate the handset switch and start talking.

NOTE: When Telephone TP-9 is used on a circuit which is connected to a switchboard, a break-in signal may be assumed to be a ring-off signal by the switchboard operator. In this case it will be necessary to wait for the operator's challenge before continuing the conversation.

SECTION III
FUNCTIONING OF PARTS

7. THEORETICAL CONSIDERATIONS.

a. The distance over which satisfactory telephone communication can be accomplished is limited by the attenuation of the line and by noise, crosstalk, and other interference present in the circuit. To extend the communication range it becomes necessary to use transmitting amplifiers which will impress stronger signals on the line, and thereby provide a more favorable signal-to-noise ratio. To compensate for the losses in the line, it is necessary to provide amplifiers in the receiving circuit. The receiving amplifiers will increase the communication range as long as a good signal-to-noise ratio is maintained.

b. Telephone TP-9 differs from other telephones in that amplifiers are self-contained in the telephone set; the transmitting circuit uses one stage of amplification, while the receiving circuit uses two stages of amplification. To provide a more favorable signal-to-noise ratio, the speech energy originating at the transmitter is amplified and sent out on the line at a comparatively high level (15 dbm). The speech energy received at the telephone terminals is amplified through two stages of amplification to provide a maximum gain of approximately 55 db.

c. Losses caused by the capacitive effects in the line increase at higher frequencies. To overcome these losses, the receiving amplifier of Telephone TP-9 is designed to provide greater amplification at higher voice frequencies (fig. 5). In this way an equalizing action is obtained which results in a satisfactory over-all frequency-response characteristic.

d. Transmission of speech energy from both ends of the line simultaneously is not possible with Telephone TP-9 when using the amplifier, because the coupling of energy between the transmitter and the home receiving amplifier would cause oscillation, and make conversation unintelligible. A relay in the set makes the receiving circuit inoperative during transmission, and makes the transmitting circuit inoperative when speech is being received.

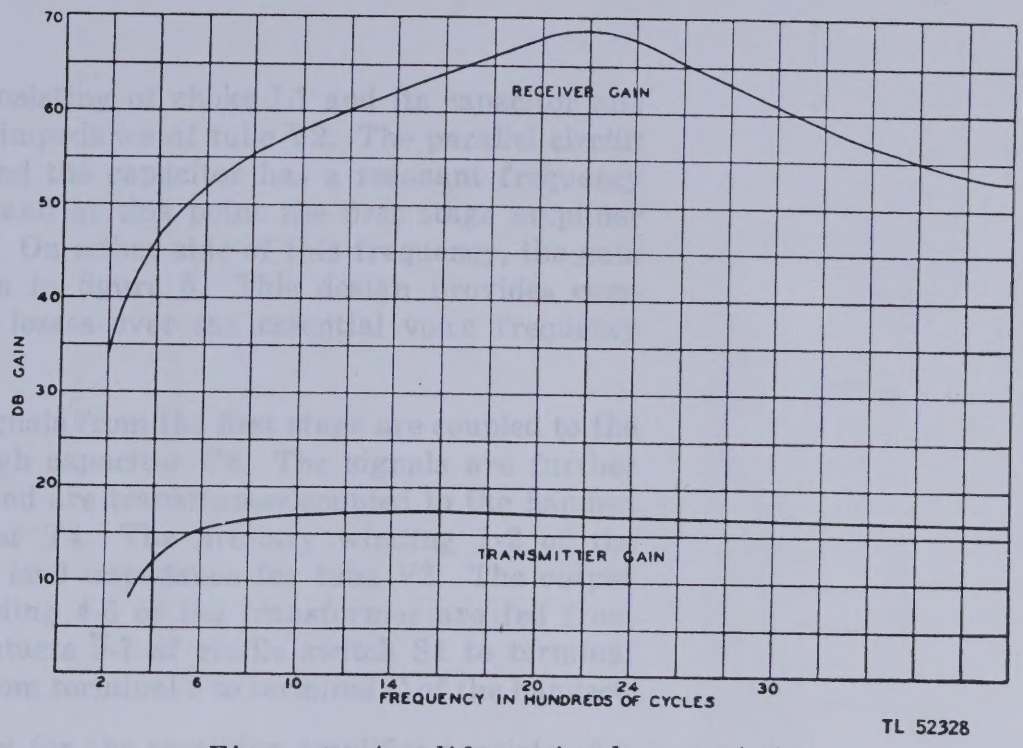

Figure 5. Amplifier gain characteristics.

8. CIRCUIT FEATURES.

The schematic diagram of Telephone TP-9 (fig. 6) shows the circuit with the handset off the cradle and the cradle lock released. This places the circuit in the position to receive incoming speech signals.

a. Circuit with Amplification. (1) RECEIVING CIRCUIT.

(a) With the handset switch released for listening and the cradle switch lever up, relay K1 is not energized. The transmitting circuit is made inoperative by a short circuit across the primary winding 1-2 of the transmitting output transformer T2 through contacts 2-3 of relay K1. This condition exists as long as the handset switch is released.

(b) Incoming speech currents at the line terminals of the telephone set flow through capacitor C-5B, winding 1-2 of transformer T3, and winding 3-4 of transformer T2. The energy induced in winding 1-2 of transformer T2 is short-circuited through contacts 2-3 of relay K1. The energy induced in the secondary winding 3-4 of transformer T3 passes to the grid of the first amplifier tube V2 through the GAIN potentiometer R12 and the grid resistor R8. Potentiometer R12 controls the gain of the receiving amplifier by varying the loss in the input circuit of tube V2.

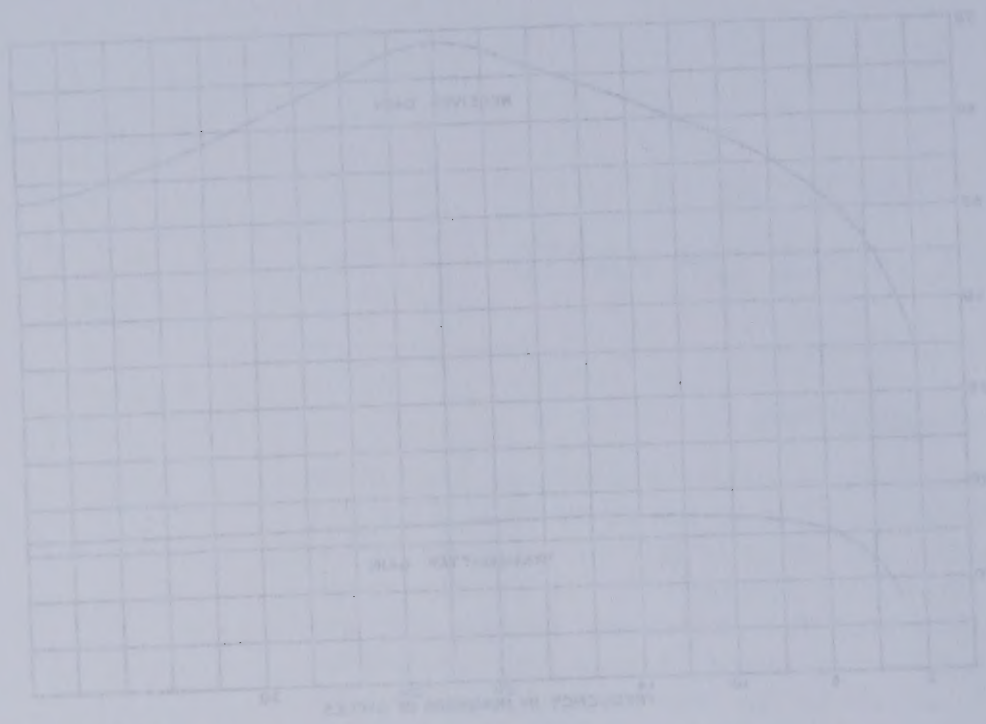

(c) The network consisting of choke L1 and its capacitor and resistor form the load impedance of tube V2. The parallel circuit formed by choke L1 and the capacitor has a resonant frequency of about 2,000 cycles, and at this point the first stage amplifier has its maximum gain. On either side of this frequency, the gain will decrease as shown in figure 5. This design provides compensation for the line losses over the essential voice frequency band width.

(d) The amplified signals from the first stage are coupled to the grid of tube V3 through capacitor C4. The signals are further amplified by tube V3, and are transformer-coupled to the handset receiver by transformer T4. The primary winding 1-2 of the transformer forms the load impedance for tube V3. The output signals induced in winding 4-5 of the transformer are fed from terminal 4 through contacts 6-7 of cradle switch S1 to terminal R of the handset, and from terminal 5 to terminal C of the handset.

(e) The power supply for the receiving amplifier consists of a 1½-volt Battery BA-65 which supplies filament voltage to the tubes, and three 22½-volt Batteries BA-2 which supply plate voltage to the tubes. The negative side of the batteries is grounded through contacts 1-11-12 of switch S1.

NOTE: The term *ground* applies to a common return point on the terminal strip in the amplifier chassis (fig. 7). All parts in the telephone are electrically insulated from the housing so that the circuits will not be earth-grounded when the telephone is placed on the ground.

(2) TRANSMITTING CIRCUIT.

(a) When the handset switch is operated and the cradle-switch lever is up, current for energizing the transmitter is fed from the positive side of Battery BA-27 through the handset (HS) switch, transmitter (T), winding 1-5 of relay K1, and winding 3-2 of transformer T1 to the negative side of Battery BA-27. Relay K1 closes its contacts (3-4), and removes the short circuit from winding 1-2 of transformer T2. Contacts 3-4 of the relay apply positive battery directly to the plate of the first receiving amplifier tube V2, thus short-circuiting the load impedance network and making the receiving amplifier inoperative. This condition exists as long as the handset switch is held operated.

(b) Speech currents originating in the transmitter (T) flow through winding 2-3 of the input transformer T1 and are in-

947407 O - 51 - 3

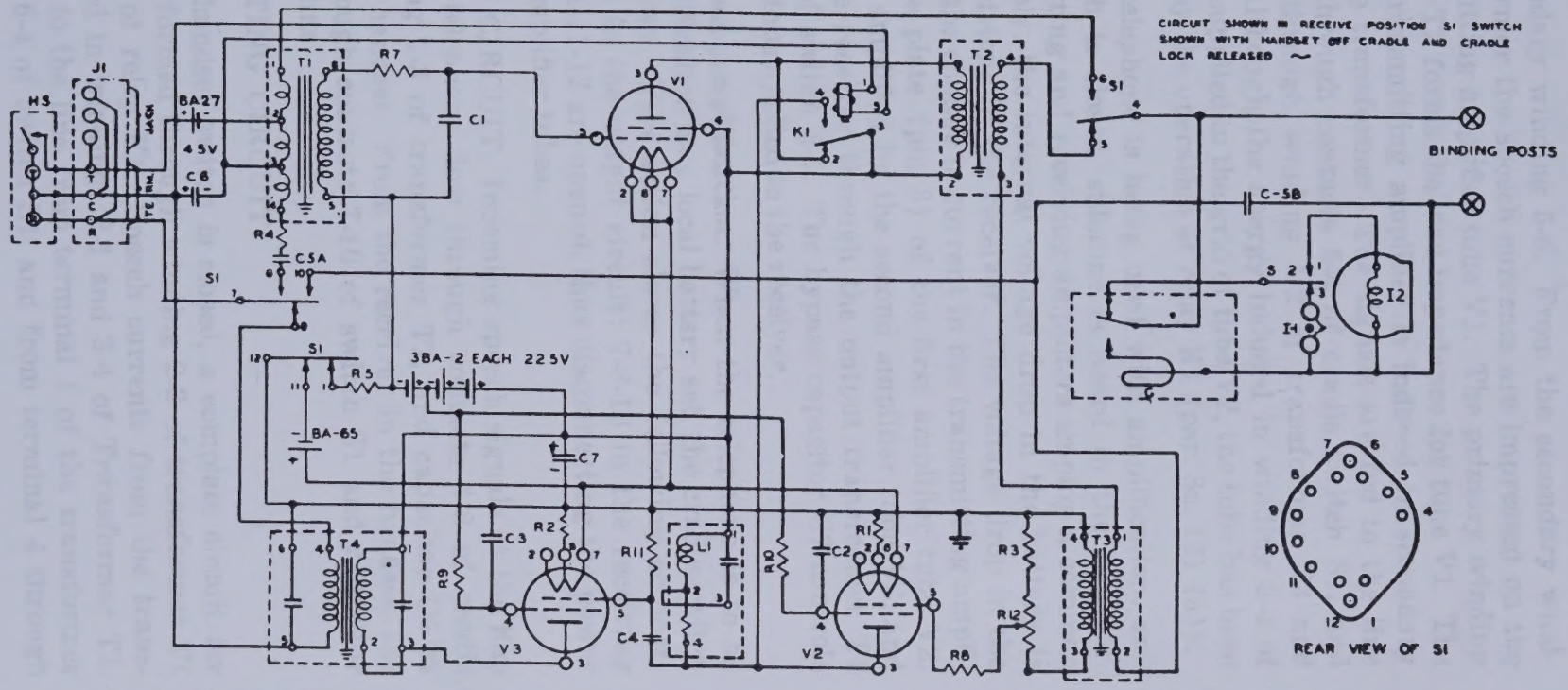
CIRCUIT SHOWN IN RECEIVE POSITION S1 SWITCH SHOWN WITH HANDSET OFF CRADLE AND CRADLE LOCK RELEASED
BINDING POSTS
3BA-2 EACH 22.5V
BA-65
REAR VIEW OF S1

REF. NO	DESCRIPTION
C1	CAPACITOR .0047 MF ± 20% 500 WVDC
C2	CAPACITOR .001 MF ± 20% 500 WVDC
C3	CAPACITOR .0047 MF ± 20% 500 WVDC
C4	CAPACITOR .01 MF ± 20% 300 WVDC
C5A, C5B	CAPACITOR - 2 SECT., .3 M F., ±10% X .5 MF., + 20% -10% 500 WVDC
C6	CAPACITOR 10 MF + 50% - 10% 25 WVDC
C7	CAPACITOR 16 MF + 50% + 10% 150 WVDC
R1	RESISTOR 4 Ω ± 10%, 1/2 W.
R2	RESISTOR 4 Ω ± 10% 1/2 W.
R3	RESISTOR 220 Ω ± 10% 1/2 W
R4	RESISTOR 330 Ω ± 10% 1/2 W

REF. NO	DESCRIPTION
R5	RESISTOR 1000 Ω ± 10%, 1/2 W.
R7	RESISTOR 56000 Ω ± 10% 1/2 W
R8	RESISTOR 150000 Ω ± 10% 1/2 W
R9	RESISTOR 270000 Ω ± 10% 1/2 W
R10	RESISTOR 470000 Ω ± 10% 1/2 W
R11	RESISTOR 470000 Ω ± 10% 1/2 W
R12	RESISTOR GAIN CONTROL 250 000 Ω
K1	RELAY 50 OHMS
T1	TRANSFORMER TRANSMITTER INPUT
T2	TRANSFORMER TRANSMITTER OUTPUT
T3	TRANSFORMER RECEIVER INPUT
T4	TRANSFORMER RECEIVER OUTPUT

REF. NO	DESCRIPTION
L1	NETWORK INTERSTAGE COUPLING, 8-8 M
S1	SWITCH - ROTARY HANDSET CRADLE
S2	SWITCH - ROTARY SIG. SELECTOR
HS	HANDSET TS-9
G	GENERATOR GN 38-B
I1	RINGER MC-131
I2	COILS - VISUAL SIGNAL
V1	VACUUM TUBE JAN 3Q5-GT
V2	VACUUM TUBE JAN 3Q5 GT
V3	VACUUM TUBE JAN 3Q5 GT
J1	JACK ASS'Y 4A9008 A/20

Figure 6. Schematic diagram.

TL 52329

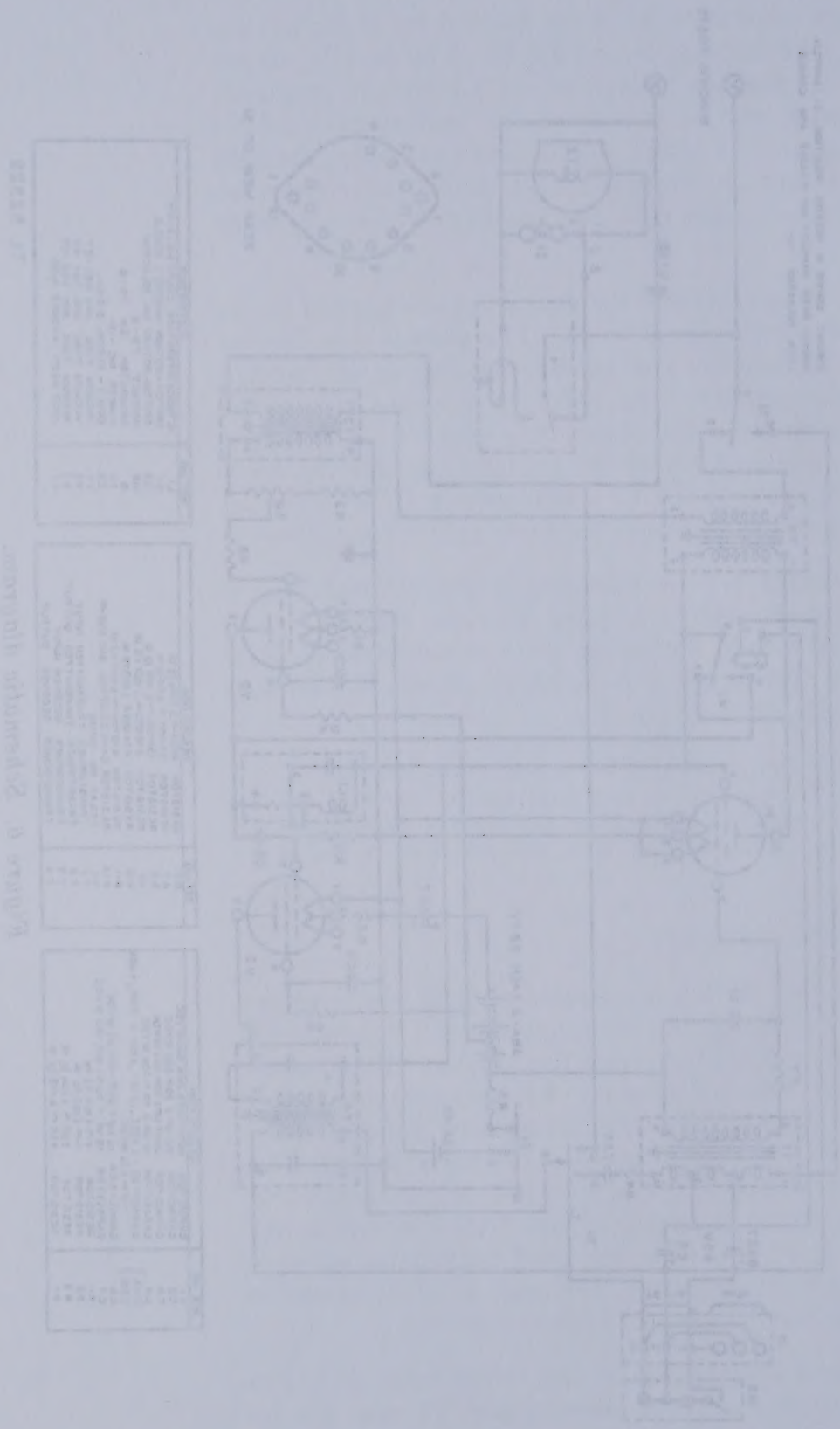

duced in the secondary winding 5-6. From the secondary winding of the transformer the speech currents are impressed on the grid of the transmitting amplifier tube V1. The primary winding 1-2 of transformer T2 forms the load impedance for tube V1. The output from the transmitting amplifier is induced in secondary winding 3-4 of the transformer. The signals are fed to the line from terminal 4 through contacts 5-4 of cradle switch S1, and from terminal 3 through winding 1-2 of transformer T3 and capacitor C-5B. Although the energy induced in winding 3-4 of transformer T3 is supplied to the grid of tube V2, the tube has been made inoperative by the operation of relay K1 (par. 8a. (2) (a)).

(c) When the telephone is being used with amplification, and the handset switch is closed, sidetone is heard in the receiver. Since the transmitting and receiving amplifiers employ a common plate voltage supply, the internal voltage drop in the battery is used to provide sidetone in the receiver. The voltage drop in the battery caused by the change in current in the transmitting amplifier appears at the plate (pin 3) of the first amplifier tube V2. These signals are amplified by the second amplifier tube V3, and are applied to the receiver through the output transformer T4 and contacts 9-7 of switch S-1. The bypass capacitor C7 controls the amount of sidetone applied to the receiver.

b. Circuit without Amplification. When the telephone is to be used without amplification as a local battery set, the cradle-switch lever is locked down. This action closes the following contacts of switch S1: 4-6 in the output circuit; 7-8-10 in the receiving circuit. Contacts 1-11-12 are opened, thus disconnecting the power supply from the amplifier tubes.

(1) RECEIVING CIRCUIT. Incoming speech signals at the line terminals of the telephone flow through contacts 4-8 of cradle switch S1, winding 1-3 of transformer T1, and capacitor C6 to terminal C of the handset. From the receiver in the handset, the currents flow through contacts 7-10 of switch S1 and capacitor C-5B back to the line.

(2) TRANSMITTING CIRCUIT.

(a) When the handset switch is closed, a complete circuit for Battery BA-27 is formed through winding 2-3 of transformer T1 and winding 1-5 of relay K1. Speech currents from the transmitter are induced in windings 2-1 and 3-4 of Transformer T1. They are applied to the line from terminal 1 of the transformer through contacts 6-4 of switch S1, and from terminal 4 through

resistor R4, capacitor C5A, contacts 8-10 of switch S1, and capacitor C-5B.

(b) When the telephone is being used without amplification, sidetone is heard in the receiver. The circuit for the sidetone voltage is as follows: transmitter currents are induced in winding 3-4 of transformer T1. These currents flow to the receiver from terminal 3 through capacitor C6, and from terminal 4 through resistor R4, capacitor C5A, and contacts 8-7 of switch S1.

c. Signaling. When the SIG-BELL switch S2 is in the BELL position, ringer MC-131 is connected through the generator switch across the line. When switch S2 is in the SIG position, the visual signal is connected across the line through the generator switch. The ringer and the visual signal both offer high impedance to voice-frequency currents and low impedance to the low-frequency signaling currents.

SECTION IV
MAINTENANCE

NOTE: Failure or unsatisfactory performance of equipment used by Army Ground Forces and Army Service Forces will be reported on W.D., A.G.O. Form No. 468 (Unsatisfactory Equipment Report). If Form No. 468 is not available, see TM 38-250. Failure or unsatisfactory performance of equipment used by Army Air Forces will be reported on Army Air Forces Form No. 54 (unsatisfactory report).

9. INSPECTION.

a. General. At regular intervals during the operation of Telephone TP-9, inspect the equipment to see that all parts are functioning properly.

b. Batteries. The batteries should be checked weekly with a voltmeter. Voltage measurements should be made under actual load conditions. Replace the batteries when the measured voltage drops to about two-thirds of the rated voltage.

c. Vacuum Tubes. Test the vacuum tubes at least once a month and make replacements when necessary.

10. SERVICING.

a. Repairs by Operating Personnel. Repairs on Telephone TP-9 by operating personnel will be confined to testing and replacement of batteries, vacuum tubes, and handset (par. 11a). All other repairs will be made by qualified maintenance personnel only. For information on replacement of batteries, refer to the operating instructions label mounted on the equipment.

b. Repairs by Maintenance Personnel. (1) All repairs, other than the replacement of batteries, vacuum tubes, and handset, are to be made by maintenance personnel. To assist in the location of trouble in the telephone set, schematic and wiring diagrams appear in figures 6 and 12, respectively. A wiring diagram of the tube socket connections is shown in paragraph 18. Directions for

SECTION IV

MAINTENANCE

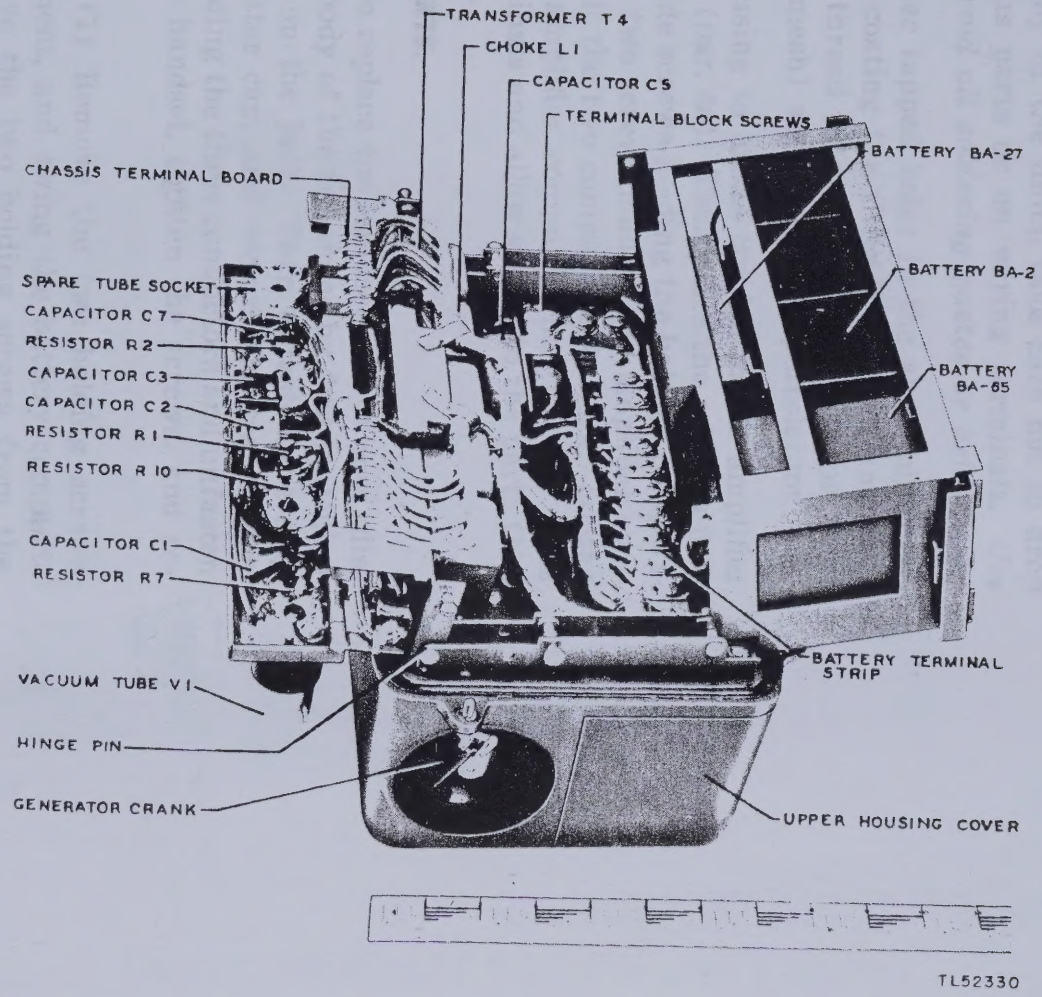

Figure 7. Telephone TP-9, battery and amplifier compartments open.

the adjustment of the generator, the ringer, and the visual signal are given in paragraph 12, and a trouble-shooting chart appears in paragraph 16. Complete instructions for the replacement of parts are given in paragraph 11.

(2) Transformers, capacitors, resistors, switches, and gain control must be replaced only when necessary. When replacing or adjusting apparatus on any of the units, take care not to drop excess solder on apparatus parts or on wiring terminals. *Use only rosin-core solder. Avoid all soldering pastes or acids.*

(3) All screws which enter tapped holes in the aluminum casting must be protected by coating the threads with an anti-seize substance such as Alcoa thread lubricant, which is a paste of 50 percent zinc dust (200 mesh) and 50 percent petrolatum.

(4) Remove the lower housing to locate trouble in the amplifier circuits of Telephone TP-9 (par. 4a). Then place the set on a firm support; remove the two side screws holding the battery compartment to the frame and the two screws holding the amplifier compartment to the frame. Tilt the two compartments back. Loosen the two fasteners on the amplifier compartment (fig. 3). This will expose the socket terminals and allow access to the parts that are mounted on the chassis.

11. REPLACEMENT OF PARTS.

a. Handset TS-9-( ). To replace the handset and/or cord, disconnect the cord from the body of the telephone by first loosening the three screw terminals on the jack. Then unfasten the stay cord, unscrew the transmitter cap, and remove the transmitter unit. Loosen the screws holding the three conductors and unfasten the stay cord. Replace the handset, tighten the screws, and refasten the stay cord.

b. Generator GN-38-B. (1) Remove the two holding screws from the battery compartment, and swing the battery compartment back (fig. 3). Remove the two holding screws from the amplifier chassis (fig. 3). Remove the two split pins which hold the amplifier chassis to the bracket, and lift the amplifier chassis from the frame. Place it aside, being very careful not to break or pull out any soldered cable connections.

(2) Remove the four screws which hold the generator to the top of the upper housing. Move the generator to one side, and disengage the universal joint which connects the armature shaft to the generator crank. Lift the generator out of the housing and

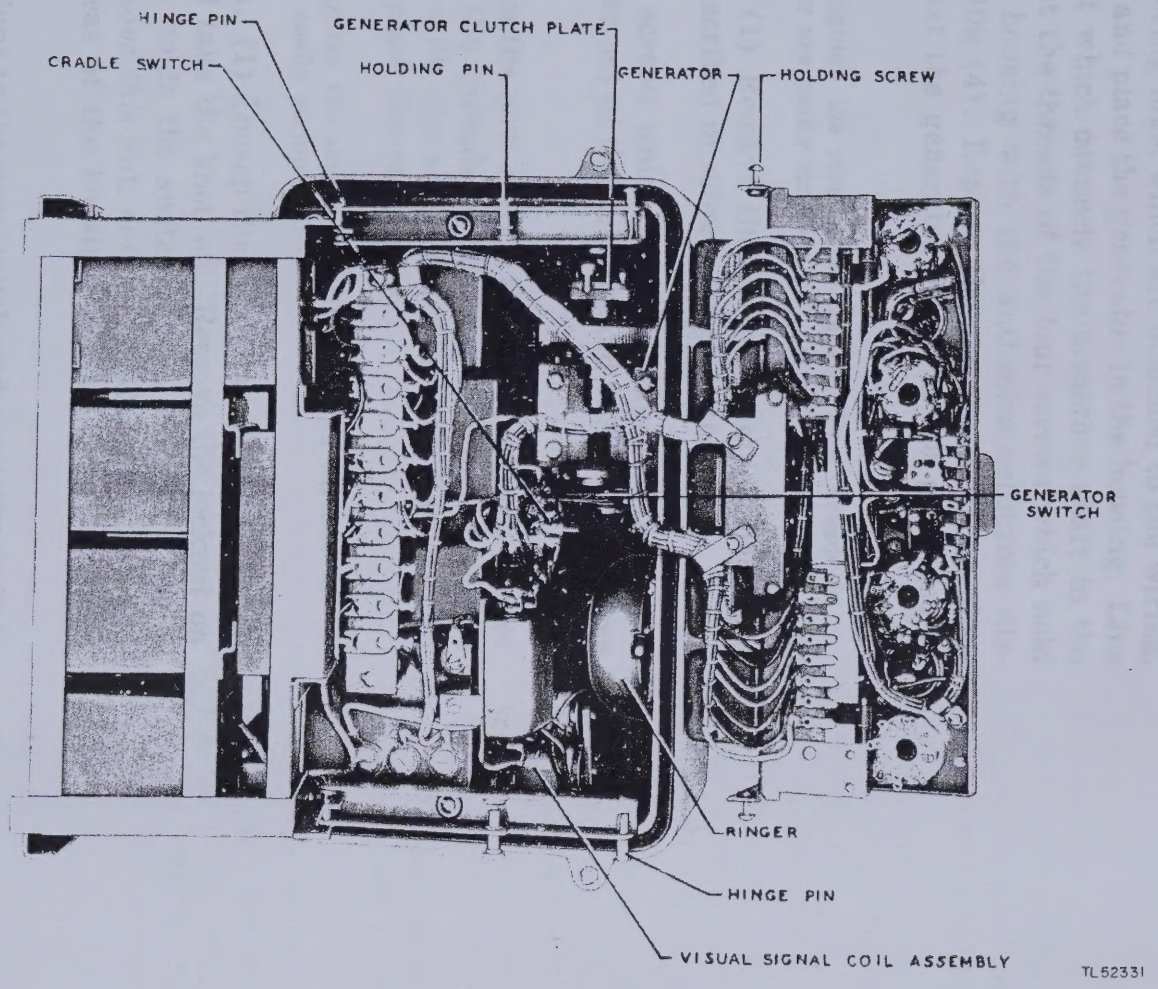

Figure 8. Telephone TP-9, amplifier chassis removed.

remove the screws holding the soldering lugs to the generator switch. These are the only connections on the generator.

NOTE: It is not necessary when removing the generator to remove the waterproof bearing which holds the shaft of the generator crank.

(3) Connect the soldering lugs, which are attached to the wiring, to the new generator, and place the generator in the housing. Line up the universal joint which connects the armature shaft to the generator crank. Coat the threads of the four screws which hold the generator to the housing with the anti-seize substance discussed in paragraph 10b (4). Replace the screws. With an ohmmeter check to see that the generator frame is not grounded to the housing.

CAUTION: Do not tighten the screws too tightly. The threads in the aluminum castings are easily stripped.

c. Ringer MC-131. (1) Remove the battery compartment and amplifier chassis as described in subparagraph **b** above.

(2) Remove the four screws which hold the ringer to the upper housing. Lift the ringer out of the housing and unsolder the wires connected to it.

(3) Solder the wires to the new ringer, and place the new ringer in the housing. Coat the threads of the screws which hold the ringer to the housing with the anti-seize substance discussed in paragraph 10b(4). Replace the screws.

CAUTION: Do not tighten the screws too tightly. The threads in aluminum casting are easily stripped.

d. SIG-BELL Switch. (1) Loosen the two setscrews in the knob on the front panel, and take the knob off. Remove the locknut on the front panel which holds the switch to the housing. *Use a crescent wrench to remove this nut, not pliers.* Carefully pull the switch out from the rear of the housing, and unsolder the connections.

(2) Solder the connections to the new switch and place the switch in position from the rear of the housing. Replace the locknut which holds the switch to the front panel, and tighten with a crescent wrench. Replace the knob, and tighten the setscrews.

e. GAIN Control. The GAIN control is removed by taking off the knob, removing the locknut, and pulling the control out in the same manner described in subparagraph **d** above.

947407 O - 51 - 4

f. Cradle Switch. (1) Remove the cradle and latch assembly from the housing by removing the two screws. Remove the cradle-switch lever by loosening the setscrew which holds it to the switch shaft, and pulling the lever off the shaft. Remove the locknut which holds the switch to the housing. *Use a crescent wrench to remove this nut, not pliers.*

(2) Remove the lower housing and turn the unit over. Tilt the battery compartment out of the way, and remove the amplifier chassis from the frame (par. 11b(1)). Remove the four screws which hold the generator in place, and lift the generator out of the housing. Pull the cradle switch out, and unsolder the connections.

(3) Solder the connections to the new cradle switch, and insert the switch in its proper position. Replace the generator, making sure that the threads of the screws which hold the generator to the housing have been coated with anti-seize substance. Replace the amplifier housing and the battery compartment. Replace the locknut on the front panel, and tighten with a crescent wrench. Replace the cradle-switch lever, and the cradle and latch assembly.

g. Handset Terminal. Remove the three screws from the under side of the housing which hold the handset terminal to the housing. Be careful not to lose the washers. Lift the handset terminal from the housing. Install the new terminal. Replace the soldering lugs containing the wiring connections, and replace the screws.

h. Relay K1. (1) Relay K1 is hermetically sealed against dust and moisture. If the relay becomes defective, do not attempt to open the can in which the relay is mounted.

(2) Replace the relay as follows: Remove the four screws which hold the relay can to the chassis; carefully withdraw the relay far enough to expose the terminals. Unsolder the connections to the relay, and remove the relay. Solder the connections to the new relay, and fasten the relay to the chassis with the four screws.

12. ADJUSTMENTS.

All parts of the telephone are adjusted in production and should not require adjustment in normal field use. If adjustments are necessary, however, make the following tests:

a. Visual Signal. (1) The spring tension on the visual-signal leaf should be adjusted so that the leaf will just barely be held in place by the magnet. If this condition is not met, weak ringing currents will not operate the visual signal. To adjust the spring tension, follow the procedure given below.

(2) Release the visual-signal leaf by hand, and hold the leaf close to the magnet. Loosen the clamping screw which holds the adjusting pin in position (fig. 9). Turn the adjusting pin to regulate the tension on the spring. The tension on the spring should be adjusted so that the magnet will just barely hold the leaf in position. If the spring tension is too loose, weak ringing currents will not operate the signal.

(3) When the spring tension has been adjusted properly, tighten the clamping screw which holds the adjusting pin in place.

NOTE: Do not tighten the clamping screw any more than is necessary to hold the adjusting pin in place. The brackets are made of aluminum, and the threads are easily stripped.

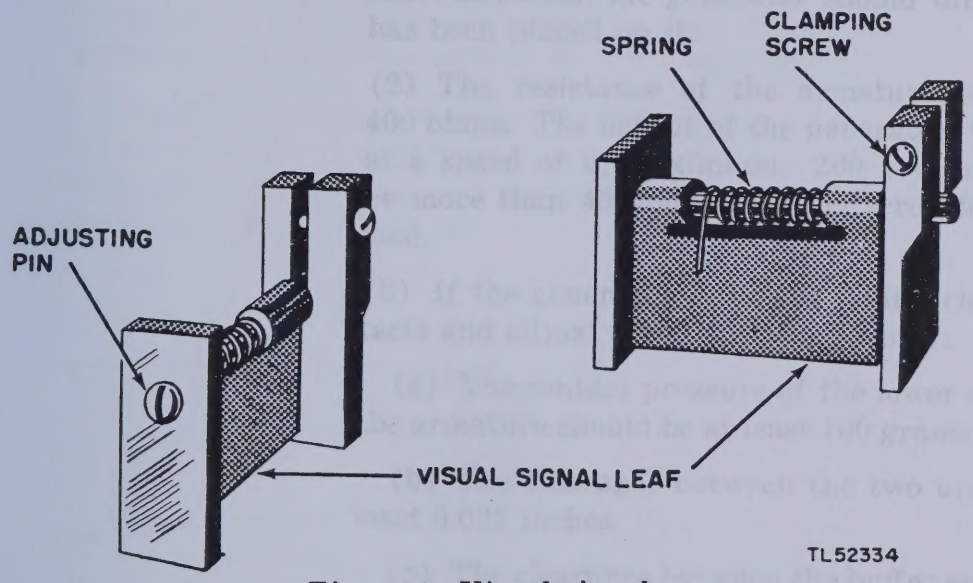

Figure 9. Visual signal.

b. Ringer MC-131. (1) When the clapper is moved manually away from the gong projection and released, the magnet should pull it back. If this does not occur, the magnet is weak and must be replaced.

(2) The resistance of each coil is about 650 ohms (1,300 ohms for the two in series). A deviation of more than 15 percent from this value indicates a defective coil.

(3) The ringer should operate on 6 milliamperes at 16 to 20 cycles per second. If the ringer draws more current, it should be replaced. Adjust the ringer as follows:

(a) Operate the clapper manually. It should strike the gong projections, rebound, and come to rest with a slight clearance between the clapper and the nearest gong projection.

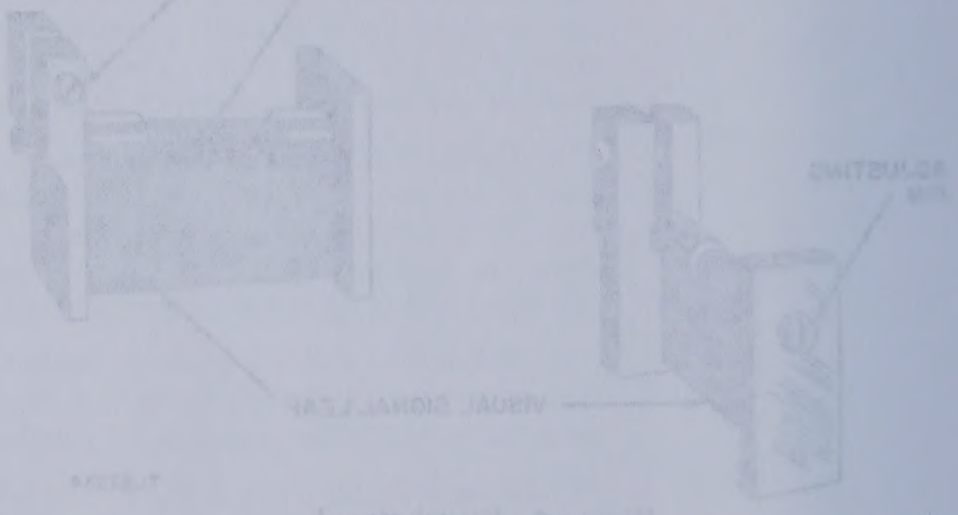

(b) If the condition in subparagraph (a) above does not exist, loosen the two gong-clamping screws and rotate the gong until the clapper strikes each gong projection equally.

(c) If the travel of the clapper is not sufficient or is excessive, increase or decrease the armature travel by means of the two adjusting nuts located at the end of the magnet opposite the clapper.

(d) If the ringer cannot be adjusted by the above means, as a last resort bend the clapper rod.

c. Generator GN-38-B. (1) The generator should turn easily when the output circuit is open. When the output terminals are short-circuited, the generator should turn hard as though a drag has been placed on it.

(2) The resistance of the armature winding should be about 400 ohms. The output of the generator, when the crank is turned at a speed of approximately 200 revolutions per minute, should be more than 45 volts when delivered to a 1,000-ohm resistance load.

(3) If the generator switch is faulty, clean and burnish the contacts and adjust the springs as follows:

(a) The contact pressure of the lower spring against the end of the armature should be at least 100 grams (3.5 ounces).

(b) The clearance between the two upper springs should be at least 0.035 inches.

(c) The clearance between the buffer on the upper shaft and the nearest spring should be at least 0.025 inches when the shaft is in its normal position.

(d) When the shaft is in the cranking position, the contact pressure between the two upper springs should be between 75 grams (2.6 ounces) and 125 grams (4.4 ounces).

CAUTION: Do not remove the alnico magnet pole pieces of the generator. If the magnetic bridge between the two magnets is disturbed, the magnets may become discharged to such an extent that the output of the generator will be lowered.

13. LUBRICATION.

In general, lubrication as a field service is not required for Telephone TP-9. When the set is in a repair station for reconditioning, the generator should be lubricated before it is put back

in service. To lubricate the generator, follow the procedure given below.

a. Clean all dirt and grease from bearings and gear surfaces. Use a cloth or sash brush moistened with cleaning fluid. Do not allow cleaning fluid to enter the armature coil.

NOTE: Leaded gasoline will not be used as a cleaning fluid for any purpose. Solvent, Dry Cleaning, Federal Specification P-S-661a, is available, as a cleaning fluid, through established supply channels. Oil, Fuel, Diesel, U. S. Army Specification 2-102B, may be used for cleaning purposes when solvent, dry cleaning, is not at hand. Since unleaded gasoline is available only in limited quantities, and only in certain locations, it should be used for cleaning purposes only when no other agent is suitable. Carbon tetrachloride, or fire-extinguishing liquid (carbon tetrachloride base), will be used, if necessary, *only on contact parts of electronic equipment.*

b. Lubricate all points as indicated in figure 10. *Never use an excess of lubricant.* The generator is mounted upside down in the housing of the telephone, and excess lubricating materials will run down into the telephone set.

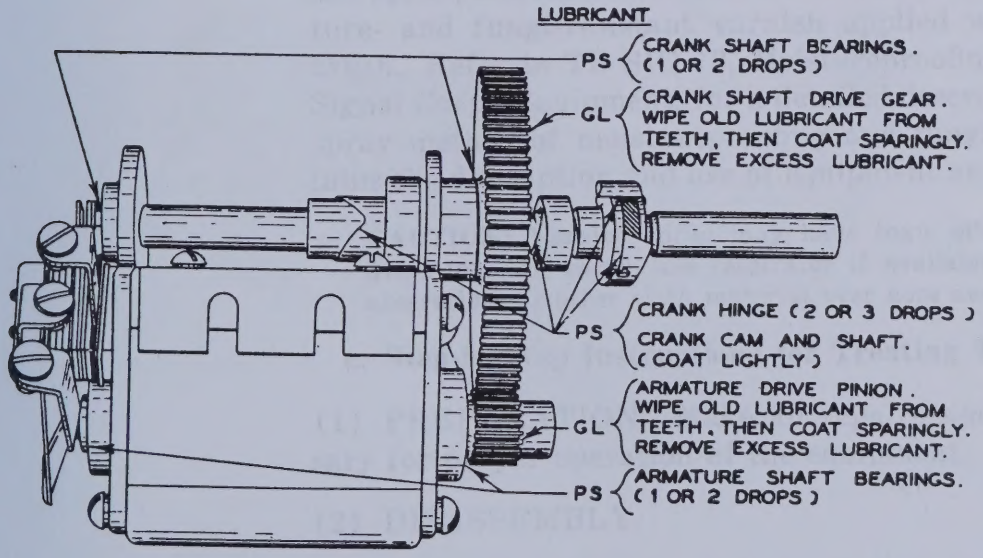
LUBRICANT
PS
CRANK SHAFT BEARINGS. (1 OR 2 DROPS)
GL
CRANK SHAFT DRIVE GEAR. WIPE OLD LUBRICANT FROM TEETH, THEN COAT SPARINGLY. REMOVE EXCESS LUBRICANT.
PS
CRANK HINGE (2 OR 3 DROPS)
CRANK CAM AND SHAFT. (COAT LIGHTLY)
GL
ARMATURE DRIVE PINION. WIPE OLD LUBRICANT FROM TEETH, THEN COAT SPARINGLY. REMOVE EXCESS LUBRICANT.
PS
ARMATURE SHAFT BEARINGS. (1 OR 2 DROPS)

- KEY -

LUBRICANT	
PS - OIL, LUBRICATING, PRESERVATIVE, SPECIAL,	U.S. ARMY 2-120
GL - GREASE, LUBRICATING, SPECIAL,	SPEC. NO. AXS-637

TL90795A

Figure 10. Generator GN-38-B, lubrication points.

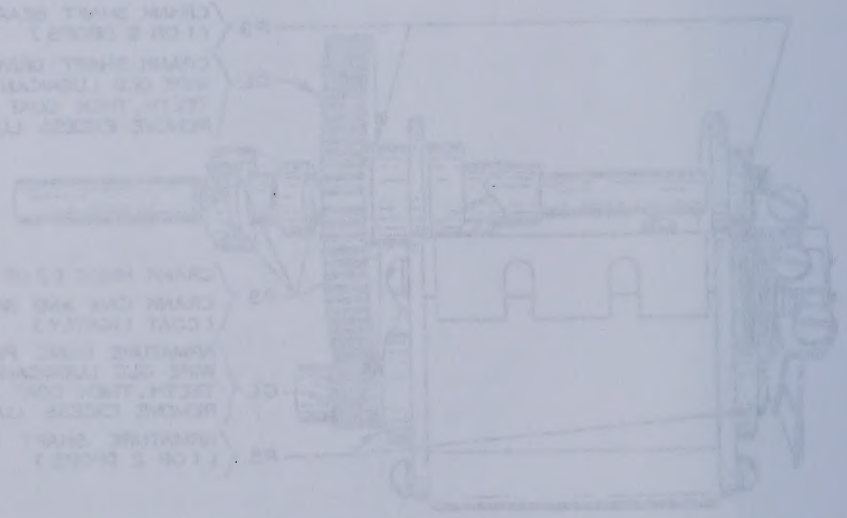

14. MOISTUREPROOFING AND FUNGIPROOFING.

a. General. The operation of Signal Corps equipment in tropical areas where temperature and relative humidity are extremely high requires special attention. The following items represent problems which may be encountered in operation:

(1) Resistors, capacitors, coils, chokes, transformer windings, etc., fail.

(2) Electrolytic action takes place in resistors, coils, chokes, transformer windings, etc., causing eventual break-down.

(3) Hook-up wire and cable insulation break down. Fungus growth accelerates deterioration.

(4) Moisture forms electrical leakage paths on terminal boards and insulating strips, causing noise and crosstalk.

(5) Moisture provides leakage paths between battery terminals.

b. Treatment. A moistureproofing and fungiproofing treatment has been devised which, if properly applied, provides a reasonable degree of protection against fungus growth, insects, corrosion, salt spray, and moisture. The treatment involves the use of a moisture- and fungi-resistant varnish applied with a spray gun or brush. Refer to TB SIG 13, Moistureproofing and Fungiproofing Signal Corps Equipment, for a detailed description of the varnish-spray method of moistureproofing and fungiproofing which contains the description and use of equipment and materials required.

> CAUTION: Varnish spray may have toxic effects if inhaled. To avoid inhaling spray, use respirator if available; otherwise, fasten cheesecloth or other cloth material over nose and mouth.

c. Step-by-step Instructions for Treating Telephone TP-9.

(1) PREPARATION. Make all repairs and adjustments necessary for proper operation of the equipment.

(2) DISASSEMBLY.

(a) Unfasten the four screws which hold the two housings together, and remove the lower housing (not to be treated).

(b) Remove the two holding screws from the battery compartment. Remove the two split pins which hold the battery compartment to the mounting brackets, and take off the battery compartment (not to be treated).

(c) Remove the two chassis fasteners from the amplifier chassis. Remove the two holding screws, and swing the amplifier chassis outward.

(d) Remove the two mounting screws from the battery terminal strip. Lift the terminal strip to gain access to its under side.

(e) Clean all dirt, dust, rust, fungus, oil, grease, etc., from the equipment to be processed.

(3) MASKING.

(a) Mask the case gasket with tape only (fig. 11).

(b) Using cloth or paper, form a common cover over the main part of the unit to prevent the entrance of varnish while spraying the internal wiring of the amplifier chassis.

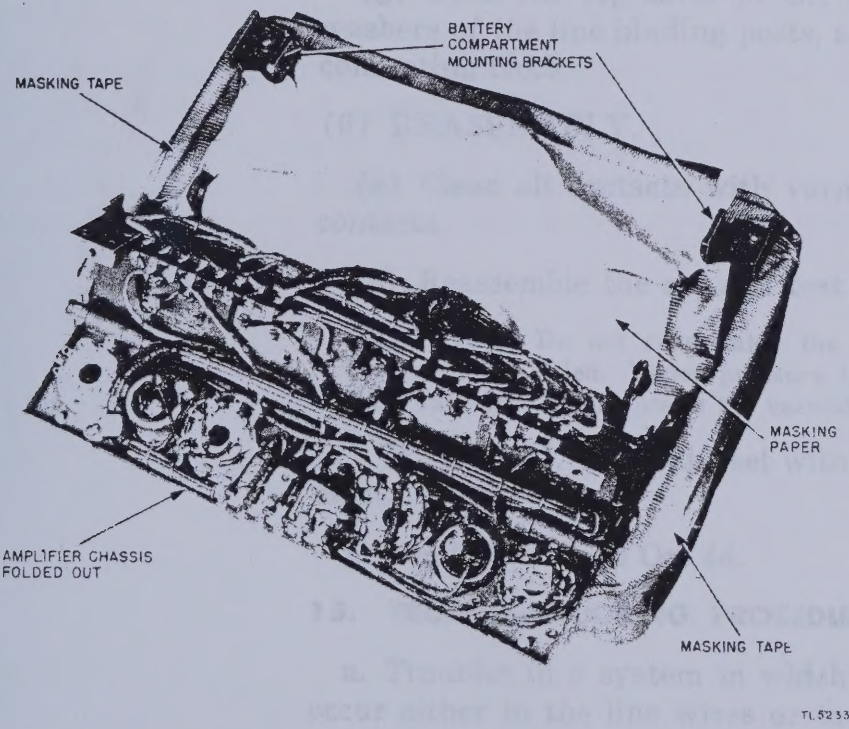

Figure 11. Masking for moistureproofing and fungiproofing.

(4) DRYING. Dry the chassis for 4½ to 5½ hours at 135° F. *Do not exceed 135° F.*

(5) VARNISHING. Apply three coats of moistureproofing and fungiproofing varnish (Lacquer, Fungus-resistant, Spec. No. 71-2202 (Stock No. 6G1005.3), or equal) as follows:

(a) Spray all the internal wiring and small parts of the amplifier chassis, and as much of its connecting cable not covered by masking as possible.

(b) After three spray coats have been applied, remove the masking.

(c) Brush the coils of the visual signal magnet as completely as possible.

(d) Brush both sides and all edges of the battery terminal strip.

(e) Brush all wires and connections, except the cradle switch connections, which were protected during the spray application.

(f) Brush the surface of the metal-cased capacitors, the surfaces of the bell, and the bottoms of the five transformers to provide a fungicidal reservoir.

(g) Open the top cover of the case and brush the insulating washers of the line binding posts, and the surfaces of the handset connecting block.

(6) REASSEMBLY.

(a) Clean all contacts with varnish remover, and burnish the contacts.

(b) Reassemble the set and test its operation.

CAUTION: Do not reassemble the waterproof housing until the varnish has dried. Vapor pressure built up by the evaporation of the fast-drying solvents in the varnish may cause the set to explode.

(7) MARKING. Mark the set with "MFP" and the date of treatment.

Example: MFP—8 Oct 44.

15. TROUBLE-SHOOTING PROCEDURE.

a. Troubles in a system in which Telephone TP-9 is used may occur either in the line wires or in the telephone itself. In general, an indication of the condition of the line and the telephone can be determined to some extent by the ringing signals. If a ringing signal is received, but it is impossible to hear over the circuit, the telephone should be suspected of being faulty. If no ringing signals or speech signals can be received, the line can be suspected of being at fault. Noisy operation may occur as a result of trouble in either the line or the telephone.

b. When trouble is encountered, a quick check may be made by changing the telephone to local battery operation (par. 6). This check is especially useful for determining the origin of trouble causing noisy operation, and also for checking the condition of the amplifiers. This check will be satisfactory only when losses in the circuit are not excessive. A more reliable way of testing the telephone is to disconnect it from the line and connect it to a telephone which is known to be in working order. Telephone EE-8-( ) may be used for this purpose.

c. After the trouble has been localized to either the line or the telephone, proceed to locate the trouble.

(1) If it has been determined that the line is at fault, report the trouble to wire maintenance personnel. The line may be checked with any one of the line-testing sets available. Refer to the instructions accompanying the test set for the proper procedure in making the tests.

(2) If the trouble is in the telephone, follow the procedure outlined in the trouble-shooting chart (par. 16). To further assist in locating trouble in the telephone, a schematic diagram (fig. 6), a wiring diagram (fig. 12), a diagram of the vacuum-tube socket connections (par. 18), and a voltage and resistance chart (pars. 19 and 20) are supplied.

16. TROUBLE-SHOOTING CHART.

a. Symptom: Speech Signals Weak, or No Sound Heard in Receiver.

PROBABLE LOCATION OF FAULT	PROCEDURE
1. Line wires.	*(a)* Follow the procedure given in paragraph 15.
	(b) If trouble is not corrected, follow procedure given below.
2. Cradle switch S1 in locked position.	*(a)* Push latch to unlock cradle switch.
	(b) If trouble is not corrected, follow procedure given below.
3. Batteries run down.	*(a)* Test voltage of batteries with voltmeter. (Test should be made under actual load conditions.)
	(b) If voltage is less than two-thirds of rated voltage, replace batteries.
	(c) If trouble is not corrected, follow procedure given below.
4. Defective vacuum tubes.	*(a)* Test tubes V2 and V3. Replace faulty tubes.
	(b) If trouble is not corrected, follow procedure given below.
5. Defective handset and/or cord.	*(a)* Replace handset and/or cord according to the procedure outlined in paragraph 11*a*.
	(b) If trouble is not corrected, follow procedure given below.
6. Defective relay K1.	*(a)* Check continuity through relay K1. If relay is faulty, replace it according to the procedure outlined in paragraph 11*h*.

16. TROUBLE-SHOOTING CHART.

PROBABLE LOCATION OF FAULT	PROCEDURE
1. Fuse(s) open.	(a) Follow the procedure given in paragraph 15.
	(b) If trouble is not corrected, follow procedure given below.
2. Cradle switch S1 in locked position.	(a) Push latch to unlock cradle switch.
	(b) If trouble is not corrected, follow procedure given below.
3. Batteries run down.	(a) Test voltage of batteries with voltmeter. (Test should be made under actual load conditions.)
	(b) If voltage is less than two-thirds of rated voltage, replace batteries.
	(c) If trouble is not corrected, follow procedure given below.
4. Defective vacuum tubes.	(a) Test tubes V2 and V3. Replace faulty tubes.
	(b) If trouble is not corrected, follow procedure given below.
5. Defective headset cord.	(a) Replace headset and/or cord according to the procedure outlined in paragraph 11c.
	(b) If trouble is not corrected, follow procedure given below.
6. Defective relay K1.	(a) Check continuity through relay K1. If relay is faulty, replace it according to the procedure outlined in paragraph 11A.

a. Symptom: Speech Signals Weak, or No Sound Heard in Receiver.

	(b) If trouble is not corrected, follow procedure given below.
7. Defective cradle switch S1.	*(a)* Check contacts of cradle switch S1.
	(b) If contacts are defective and cannot be adjusted, replace switch.
	(c) If trouble is not corrected, follow procedure given below.
8. Defective bell or visual signal drop.	*(a)* Change setting of SIG-BELL switch. If speech can come through on new setting, check bell or drop, as the case may be.
	(b) Replace defective bell or signal drop.
	(c) If trouble is not corrected, follow procedure given below.
9. Amplifier circuit.	*(a)* Make voltage and resistance measurements on circuit.
	(b) Make any necessary repairs as indicated by voltage and resistance measurements.

b. Symptom: No Speech Output, or Speech Output Weak.

PROBABLE LOCATION OF FAULT	PROCEDURE
1. Cradle switch S1 in locked position.	*(a)* Push latch to unlock cradle switch.
	(b) If trouble is not corrected, follow procedure given below.
2. Batteries run down.	*(a)* Test voltage of batteries with voltmeter. (Test should be made under actual load conditions.)
	(b) If voltage is less than two-thirds of rated voltage, replace batteries.

		(c) If trouble is not corrected, follow procedure given below.
3.	Defective vacuum tubes.	*(a)* Test amplifier tube V1. Replace tube if necessary.
		(b) If trouble is not corrected, follow procedure given below.
4.	Defective handset and/or cord.	*(a)* Replace handset and/or cord according to procedure outlined in paragraph 11*a*.
		(b) If trouble is not corrected, follow procedure given below.
5.	Defective relay K1.	*(a)* Check continuity through relay K1. If relay is faulty, replace it according to the procedure outlined in paragraph 11*h*.
		(b) If trouble is not corrected, follow procedure given below.
6.	Defective cradle switch S1.	*(a)* Check contacts of cradle switch S1.
		(b) If contacts are defective and cannot be adjusted, replace switch according to procedure outlined in paragraph 11*f*.
		(c) If trouble is not corrected, follow procedure given below.
7.	Transmitting amplifier.	*(a)* Make voltage and resistance measurements on circuit.
		(b) Make any necessary repairs as indicated by voltage and resistance measurements.

c. Symptom: High Noise Level Prevails.

PROBABLE LOCATION OF FAULT	PROCEDURE
1. Line wires grounded.	*(a)* Follow the procedure given in paragraph 15.
	(b) If trouble is not corrected, follow procedure given below.
2. Defective vacuum tubes.	*(a)* Replace each vacuum tube until noise ceases.
	(b) If trouble is not corrected, follow procedure given below.
3. Defective batteries.	*(a)* Replace batteries.
	(b) If trouble is not corrected, follow procedure given below.
4. Loose connections.	*(a)* Check all soldered connections, switch contacts, and relay contacts.
	(b) Make any necessary repairs as determined by the above inspection.

d. Symptom: Visual Signal or Bell Does Not Operate, Depending on the Setting of the SIG-BELL Switch.

PROBABLE LOCATION OF FAULT	PROCEDURE
1. Line wires.	*(a)* Follow the procedure given in paragraph 15.
	(b) If trouble is not corrected, follow procedure given below.

2. Defective bell or visual signal.	*(a)* Measure resistance between binding posts. Resistance should be 1,300 ohms when the SIG-BELL switch is in the BELL position, and 1,300 ohms in the SIG position.
	(c) Check visual signal or bell, as the case may be.
	(d) If trouble is not corrected, follow procedure given below.
3. Defective switch on Generator GN-38-B.	*(a)* Check switch contacts on Generator GN-38-B.
	(b) If switch is defective, try to adjust according to procedure given in paragraph 12*c* (3).
	(c) If trouble is not corrected, replace generator.

e. Symptom: No Ringing Current Output.

PROBABLE LOCATION OF FAULT	PROCEDURE
Defective GN-38-B.	*(a)* Check switch contacts on Generator GN-38-B.
	(b) If switch is defective, try to adjust according to procedure given in paragraph 12*c* (3).
	(c) If trouble is not corrected, replace generator.

SECTION V
SUPPLEMENTARY DATA

17. MAINTENANCE PARTS LIST FOR TELEPHONE TP-9.

Ref symbol	Signal Corps stock No.	Name of part and description	Quan per unit	Running spares	Orgn stock	3d ech	4th ech	5th ech	Depot stock
	4B5500-9.1	TELEPHONE TP-9.							
		PART I							
	2Z9406.134	BOARD, terminal: 6 solder terminals; linen base natural bakelite; 2 3/16" lg x 1 7/32" wd x 1/16" thk; Fed Tele & Rad W28-50, dwg WTB2560 (numbering 1 to 6 right to left, characters upside down under terminals with 3/32" stamping filled with white); (center terminal board).	1				*	*	*
	2Z9408.111	BOARD, terminal: 8 solder terminals; linen base natural bakelite; 3 1/4" lg x 3 1/32" wide x 1/16" thk; Fed Tele & Rad W28-51, dwg WTB2560 (numbering 1 to 8 left to right under terminals with 3/32" stamping filled with white); (left-hand terminal board).	1				*	*	*

* Indicates stock available.

17. MAINTENANCE PARTS LIST FOR TELEPHONE TP-9 (contd).

Ref symbol	Signal Corps stock No.	Name of part and description	Quan per unit	Running spares	Orgn stock	3d ech	4th ech	5th ech	Depot stock
	2Z9408.110	BOARD, terminal: 8 solder terminals; linen base natural bakelite; 3¼″ lg x 31/32″ wd x 1/16″ thk; Fed Tele & Rad W28-49, dwg WTB2560 (numbering 9 to 16 left to right under terminals with 3/32″ stamping filled with white); (right-hand terminal board).	1				*	*	*
	2Z9410.96	BOARD, terminal: 10 brass, burnished nickel-plated; # 8-32 x 5/16″, screw terminals; XP bakelite; 7⅜″ lg x ⅞″ wd x ⅛″ thk; Jones HB; Fed Tele & Rad W28-46, dwg WTA2531 (two 0.180″ holes on 6⅞″ centers); (battery terminal board).	1				*	*	*
C6	3DB10-116	CAPACITOR, fixed: electrolytic; 10 mf + 50% − 10%; 25 vdcw; 2⅛″ lg x 1″ diam; Sprague 5318; Fed Tele & Rad W2-12; (metal case, hermetically sealed; 2 insulated solder lug terminals; 2 mtg feet with 7/32″ x 5/32″ holes on 1⅞″ centers; Sig C spec 71-1116); (bypass).	1			*	*	*	*

* Indicates stock available.

17. MAINTENANCE PARTS LIST FOR TELEPHONE TP-9 (contd).

Ref symbol	Signal Corps stock No.	Name of part and description	Quan per unit	Running spares	Orgn stock	3d ech	4th ech	5th ech	Depot stock
C7	3DB16-33	CAPACITOR, fixed: electrolytic; 16 mf + 50% − 10%; 150 vdcw; 2⅛″ lg x 1″ diam; Sprague 5318; Fed Tele & Rad W2-13; (metal case; hermetically sealed; 2 insulated solder lug terminals; 2 mtg feet with 7/32″ x 5/32″ holes on 1⅞″ centers; Sig C spec 71-1116); (plate bypass).	1			*	*	*	*
C1	3K2547114	CAPACITOR, fixed: mica; 470 mmf ± 20%; 500 vdcw; JAN type CM25A471M; Fed Tele & Rad W5-71; (in transmitting amplifier grid).	1			*	*	*	*
C2	3K3010214	CAPACITOR, fixed: mica; 1,000 mmf ± 20%; 500 vdcw; JAN type CM35A102M; Fed Tele & Rad W5-72; (screen bypass for V2).	1			*	*	*	*
C3	3K3547214	CAPACITOR, fixed: mica; 4,700 mmf ± 20%; 500 vdcw; JAN type CM35A472M; Fed Tele & Rad W5-68; (screen bypass for V3).	1			*	*	*	*
C4	3K4010314	CAPACITOR, fixed: mica; 10,000 mmf ± 20%; 300 vdcw; JAN type CM40A103M; Fed Tele & Rad W5-73; (interstage coupling).	1			*	*	*	*

* Indicates stock available.

17. MAINTENANCE PARTS LIST FOR TELEPHONE TP-9 (contd).

Ref symbol	Signal Corps stock No.	Name of part and description	Quan per unit	Running spares	Orgn stock	3d ech	4th ech	5th ech	Depot stock
C5A, C5B	3DA500-196.1	CAPACITOR, fixed: paper; 2 section; 300,000 mmf ± 10%, 500,000 mmf + 20%, − 10%; 500 vdcw; 3⅛″ x 2″ x ¾″ thk; Fed Tele & Rad W3-100, dwg WTA2548; (blocking).	1			*	*	*	*
	4B5500-9/6	COIL ASSEMBLY, electromagnet: visual signal; 2 coils connected, approx 1,300 ohms, 6-hy, 6-ma: single winding, 1″ diam x 1⅜″ lg over-all; Fed Tele and Rad W10-94 dwg WTA2518; (coils per Sig C spec 71-669, dwg SCD-822 except additional hole #8-32 x ⅜″ tapped in core at opposite end; permanent magnet yoke, alnico #2, 1⅜″ lg x ½″ wd x ⅛″ thk, 2 holes 0.19″ diam on 1 1/16″ centers, slotted out to ends; 2 lockwashers #8 and 2 RHI screws #8-32 x ⅝″ lg); (visual indicator magnets); (coils similar to 4B3371/E5).	1			*	*	*	*
	4B454	CRANK, generator: Crank GC-9; folding handle; cast brass with black XX phenolic tube; dull ebanol "C"; over-all dimen when folded 2″ x ⅝″ x 1″; SC-D-1797-G.	1		*	*	*	*	*

* Indicates stock available.

17. MAINTENANCE PARTS LIST FOR TELEPHONE TP-9 (contd).

Ref symbol	Signal Corps stock No.	Name of part and description	Quan per unit	Running spares	Orgn stock	3d ech	4th ech	5th ech	Depot stock
	4B5500-9/11	GASKET: brass, cadmium-plated; waterproof seal for ¼″ shaft; Victor Mfg Co type W #62032; Fed Tele & Rad W38-8; (waterproofing generator and rotary switch shafts).	4				*	*	*
	4B5500-9/1	GASKET: synthetic rubber; housing; Buna-S rubber compound; moisture seal; rectangular-shaped; 11¼″ x 7″ round corners, section ¼″ x ¼″ with V-shaped groove on one side; molded in one piece; Fed Tele & Rad W38-9, dwg WTB2537; (seal between upper & lower castings).	1				*	*	*
	4B838B	GENERATOR, hand: Generator GN-38-B.	1				*	*	*
	4B5500-9/2	GLAND, watertight: bushing; aluminum alloy #17S-T; anodized olive drab; water seal; ⅞″ diam x ½″ lg over-all; hex. head ⅞″ across flats; Fed Tele & Rad W59-58, dwg WTA2534; (hex. head 3/16″ h, recessed 1/32″ d x ¾″ diam; ¾″ ID recessed ¼″, ¼″ d inside; coaxially tapped ⅜″-32); (for switch shafts).	3				*	*	*

* Indicates stock available.

17. MAINTENANCE PARTS LIST FOR TELEPHONE TP-9 (contd).

Ref symbol	Signal Corps stock No.	Name of part and description	Quan per unit	Running spares	Orgn stock	3d ech	4th ech	5th ech	Depot stock
	4B5500-9/3	GLAND, watertight: bushing; aluminum alloy #17S-T; anodized olive drab; waterseal; 7/8" diam x 3/8" lg over-all; hex. head 15/16" across flats; Fed Tele & Rad W59-62, dwg 2512 (hex. head 1/8" h, recessed 1/8" d x 9/16" diam; 7/8" OD-24 thds 1/4" lg, undercut to minor diam 1/32" wd at both ends of threads and recessed 5/8" diam x 1/32" d, thence beveled 30°; coaxially drilled 1/4" hole); (for generator shaft).	1				*	*	*
	6G589	GRAPHITE, powdered: 4 oz can; US Army spec 2-64A; (to be saturated with oil for generator extension shaft gland).	1			*	*	*	*
	6Z4872-3	GROMMET, rubber: fits 5/16" diam hole; 7/16" OD x 3/16" ID x 3/8" thk; Fed Tele & Rad W36-2, dwg WTA1436; (chassis mounting).	4				*	*	*
	4B1109	HANDSET, telephone: Handset TS-9.	1			*	*	*	*

* Indicates stock available.

17. MAINTENANCE PARTS LIST FOR TELEPHONE TP-9 (contd).

Ref symbol	Signal Corps stock No.	Name of part and description	Quan per unit	Running spares	Orgn stock	3d ech	4th ech	5th ech	Depot stock
	4B5008A/20	JACK ASSEMBLY, telephone: 3 jacks on bakelite strip for 3-cond plug; 3¼″ lg x 1 15/16″ wd x ½″ d over-all; Fed Tele & Rad # UP-10554; SC-D-1793.	1			*	*	*	*
	2Z5790-22	KNOB, round: black molded phenolic; for ¼″ diam shaft; single Fil H Brass screw # 6-32 x 3/16″ set at 45° clockwise from arrow point; arrow marking ½″ h x ⅞″ diam over-all; Fed Tele & Rad W26-9, dwg WTA2585; (brass insert; shaft hole ⅜″ d; molded counterbored 9/32″ diam, straight knurl); (visual or bell signal).	1			*	*	*	*
	2Z5790-23	KNOB, round: black molded phenolic; for ¼″ diam shaft; single Fil H Brass screw # 6-32 x 3/16″ set at 180° from arrow point; arrow marking ½″ h x ⅞″ diam over-all; Fed Tele & Rad W26-7, dwg WTA2565; (brass insert; shaft hole ⅜″ d; molded counterbored 9/32″ diam, straight knurl); (gain control).	1			*	*	*	*

* Indicates stock available.

| | | |

17. MAINTENANCE PARTS LIST FOR TELEPHONE TP-9 (contd).

Ref symbol	Signal Corps stock No.	Name of part and description	Quan per unit	Running spares	Orgn stock	3d ech	4th ech	5th ech	Depot stock
	4B5500-9/4	LEAF, indicator: nicaloy or mu metal; olive drab enamel on one side, red enamel on other side; visual signal; approx 1 3/8″ x 1″ x 3/8″ over-all; #20 ga; Fed Tele & Rad W47-64, dwg WTA2519; (middle section of top edge rolled to 0.150″ ID for hinge pin mtg; outer sections of top edge rolled approx 1/64″ to opposite side; 1 hole 0.040″ diam, 7/16″ from edge, 3/8″ below center line of rolled edge).	1			*	*	*	*
L1	4B5500-9/7	NETWORK, interstage coupling: single winding; 5.2 h; 15/16″ h x 1 3/16″ sc over-all; Fed Tele & Rad W12-15, dwg WTA71215 (500 v DC insulation test; inclosed metal case; two 0.189″ diam mtg holes on 1.606″ centers; vacuum-impregnated; potted with resistor and capacitor; 5 soldering lug terminals).	1			*	*	*	*
	6G1318	OIL, lubricating: 4 oz can; US Army spec 2-120 (used to saturate graphite for generator shaft extension gland).	1			*	*	*	*

* Indicates stock available.

17. MAINTENANCE PARTS LIST FOR TELEPHONE TP-9 (contd).

Ref symbol	Signal Corps stock No.	Name of part and description	Quan per unit	Running spares	Orgn stock	3d ech	4th ech	5th ech	Depot stock
	6L3972-32N	PIN, hinge: brass, free-turning; dull nickel-plated; indicator leaf; std #6 RH, 0.138″ diam x 2″ lg; Fed Tele & Rad W59-64, dwg WTA2520; (1 hole 0.040″ diam 7/8″ from end); (indicator leaf).	1			*	*	*	*
	6L3973-12-IN	PIN, hinge: locking; brass rod, free-turning; dull nickel-plated; chassis mtg; 25/32″ lg over-all, 3/8″ diam head; Fed Tele & Rad W59-68, dwg WTA2584; (head 1/16″ h; shoulder 1/16″ h x 1/4″ diam; shank 21/32″ lg x 0.187″ diam rounded edge; slot 0.04″ wd x 0.125″ diam, 9/32″ from end); (battery and amplification chassis).	2				*	*	*
	4B5500-9/8	PLATE, clutch: generator; linen base bakelite fungus and moisture proof; center shaft coupling; 1 1/4″ diam x 1/8″ thk; Fed Tele & Rad W47-63, dwg WTA2515; (4 holes 1/4″ diam slotted out out to circumference, located 90° apart on 3/8″ radius from center of plate); (for generator crank shaft).	1				*	*	*

* Indicates stock available.

17. MAINTENANCE PARTS LIST FOR TURBINE TR-5 (cont'd).

17. MAINTENANCE PARTS LIST FOR TELEPHONE TP-9 (contd).

Ref symbol	Signal Corps stock No.	Name of part and description	Quan per unit	Running spares	Orgn stock	3d ech	4th ech	5th ech	Depot stock
	3Z737-21.2	POST, binding: screw type; rubber capped knob; 1¼″ lg x ½″ diam over-all; #8-32 x ½″ mtg stem; Eby "Sergeant 14RD", Fed Tele & Rad W27-2, dwg WTA1090.	2			*	*	*	*
K1	2Z7585-91	RELAY, general purpose: SPDT normal brake-make; 2 9/16″ lg x 1½″ wd x 1½″ h over-all; Sigma Instr 4 RHL; Fed Tele & Rad W94-6, dwg WTB2562; (5 contacts 0.625″ h; contact rating 1 v DC, 15 ma; coil 50 ohm; operate and release time less than 30 milliseconds; hermetically sealed; 2 mtg lugs 5/16″ off center, 1 7/8″ mtg/c); (directional control relay for amplifier).	1			*	*	*	*
R3	3RC20BE221K	RESISTOR, fixed: composition; 220 ohms + 10%; ½ w; JAN type RC20BE221K; (grid first stage, receiving amplifier).	1			*	*	*	*
R4	3RC20BE331K	RESISTOR, fixed: composition; 330 ohms ± 10%; ½ w JAN type RC20BE331K; (anti-sidetone).	1			*	*	*	*

* Indicates stock available.

17. MAINTENANCE PARTS LIST FOR TELEPHONE TP-9 (contd).

Ref symbol	Signal Corps stock No.	Name of part and description	Quan per unit	Running spares	Orgn stock	3d ech	4th ech	5th ech	Depot stock
R5	3RC20BE102K	RESISTOR, fixed: composition; 1,000 ohms ± 10%; ½ w; JAN type RC20BE102K; (filament for receiving amplifier).	1			*	*	*	*
R7	3RC20BE563K	RESISTOR, fixed: composition; 56,000 ohms ± 10%; ½ w; JAN type RC20BE563K; (transmitting amplifier grid).	1			*	*	*	*
R8	3RC20BE154K	RESISTOR, fixed: composition; 150,000 ohms ± 10%; 12 w; JAN type RC20BE154K; (grid first stage, receiving amplifier).	1			*	*	*	*
R9	3RC20BE274K	RESISTOR, fixed: composition; 270,000 ohms ± 10%; ½ w; JAN type RC20BE274K; (screen V3).	1			*	*	*	*
R10, R11	3RC20BE474K	RESISTOR, fixed: composition; 470,000 ohms ± 10%; ½ w; JAN type RC20BE474K; (screen V2 and V3).	2			*	*	*	*

* Indicates stock available.

17. MAINTENANCE PARTS LIST FOR TELEPHONE TP-9 (contd).

Ref symbol	Signal Corps stock No.	Name of part and description	Quan per unit	Running spares	Orgn stock	3d ech	4th ech	5th ech	Depot stock
R1, R2	3Z5994-30	RESISTOR, fixed: wire-wound; 4-ohms ± 10%; ½ w; ⅝″ lg x 3/16″ diam; IRC BW-½; Fed Tele & Rad W8-70; Navy spec RE 13A 372J; (filament V2 and V3).	2			*	*	*	*
R12	2Z7272.13	RESISTOR, variable: composition; 250,000 ohms ± 20%; 3 terminals; body 1⅛″ diam x 0.491″ d; shaft 0.250″ diam x 1⅛″ lg; CTS type HT 35 Taper "C"; Fed Tele & Rad W7-13, dwg WTA2554; (bushing ⅜″ -32 x ⅜″ lg); (receiving gain control).	1			*	*	*	*
I1	4B3371	RINGER, telephone: Ringer MC-131; polarized; 2 coils ea 650 ohms; Sig C spec 71-669, dwg SC-D-822.	1			*	*	*	*
	6L3766-32-7.1	SCREW, hollow: Fil H; brass, dull nickel-plated; #6-32 x 3/16″ tapped in end of shank 0.203″ diam x 1/16″ lg; head 7/16″ diam x 0.151″ h, straight side 0.093″ h, slot 0.059″ wd x 0.086″ d; Fed Tele & Rad W53-137, dwg WTA2529; (jack terminal).	3			*	*	*	*

* Indicates stock available.

17. MAINTENANCE PARTS LIST FOR TELEPHONE TP-9 (contd).

Ref symbol	Signal Corps stock No.	Name of part and description	Quan per unit	Running spares	Orgn stock	3d ech	4th ech	5th ech	Depot stock
	6L440-3.1	SCREW, machine: RH; brass; #4-40 x 3/16"; (indicator bracket).	1			*	*	*	*
	6L6632-5.1	SCREW, machine: RH; brass; #6-32 x 5/16"; (cable clamp, capacitor mounting clamp, transformer, ringer, relay).	16			*	*	*	*
	6L6832-3.9A	SCREW, machine: Bind H brass; #8-32 x 3/16"; (amplifier subassembly).	2				*	*	*
	6L6832-5.1	SCREW, machine: RH; brass; #8-32 x 5/16"; (capacitor and ringer brackets).	4			*	*	*	*
	6L6832-9.81N	SCREW, machine: hex. head; brass, dull nickel-plated; #8-32 x 7/16"; (indicator bracket).	2			*	*	*	*
	6L6832-9.1	SCREW, machine: RH; brass; #8-32 x 9/16"; (right hinge bracket).	4				*	*	*
	6L7032-12.4	SCREW, machine: Fil H; brass, dull nickel-plated; #10-32 x 3/4"; shank diam 0.165", 3/8" lg under head; Fed Tele & Rad W53-145, dwg WTA2561; (cover screw).	4				*	*	*

* Indicates stock available.

17. MAINTENANCE PARTS LIST FOR TELEPHONE TP-9 (contd).

Ref symbol	Signal Corps stock No.	Name of part and description	Quan per unit	Running spares	Orgn stock	3d ech	4th ech	5th ech	Depot stock
	6L6832-7-1.5	SCREW, shoulder: RH; brass; free-turning, dull nickel-plated; approx 29/64″ lg over-all; thd shank #8-32 x 3/16″ lg; head 0.174″ thk, 0.472″ diam, slot 0.065″ wd x 0.108″ d; shoulder 1/4″ diam x 3/32″ lg; Fed Tele & Rad W53-138, dwg WTA2541; (cradle and cradle latch).	2				*	*	*
	.2Z8678.195	SOCKET, tube: octal; ceramic base; 1 1/16″ diam x 7/16″ h over-all; Ucinite #115001-1A; Fed Tele & Rad W17-32; (metal mtg plate; two 5/32″ mtg holes; 1 1/2″ mtg centers).	4			*	*	*	*
	4B5500-9/9	SPRING, hinge: #22 ga nickel silver wire, full spring temper; indicator leaf; coil 3/16″ ID x 1/2″ free length, one end extending 1/4″ and other end extending 3/8″; Fed Tele & Rad W51-68, dwg WTA2522; (for indicator leaf).	1			*	*	*	*
	4B5500-9/10	STRAP, carrying: olive drab cotton webbing; 8′ lg x 1 1/4″ wd; Fed Tele & Rad W70-49, dwg WTB2587; (one end terminated w/grip tongue brass buckle, bronze finish; other end terminated w/brass tip, bronze finish; fungicide treatment).	1			*	*	*	*

* Indicates stock available.

| | | |

17. MAINTENANCE PARTS LIST FOR TELEPHONE TP-9 (contd).

Ref symbol	Signal Corps stock No.	Name of part and description	Quan per unit	Running spares	Orgn stock	3d ech	4th ech	5th ech	Depot stock
S2	3ZK9825-62.42	SWITCH, rotary: 1 pole, 2 position; single section; bakelite body; 27/32″ wd x 1 19/64″ lg x 1½″ d over-all; oak series 20, type 23; Fed Tele & Rad W20-36, dwg WTA2553; (3 contacts, shorting type; shaft ¼″ diam x 1⅛″ lg, bushing ⅜″ -32 x ⅜″ lg; solder lug terminals); (bell or visual signal).	1			*	*	*	*
S1	3Z9550.62	SWITCH, rotary: 3 pole, 2 position; single section; 2″ diam: Oak type DH; Fed Tele & Rad W20-37, dwg WTA2547; (spring return from position 2 to normally closed position 1; 10 contacts, nonshorting type; shaft ¼″ diam x 1¼″ diam x 1¼″ lg, bushing ⅜″ -32 x ⅜″ lg; solder lug terminals); (amplifier).	1			*	*	*	*
	3Z12004-8.7	TERMINAL, lug: ring type; brass, solder-coating; for #22 AWG wire; 1 1/16″ lg x ⅜″ wd x 0.02″ thk over-all, w/ ¼″ stud hole and 3/32″ wire hole; Cinch #1467-A, P-27; Fed Tele & Rad W58-57; (wires to Jack J1).	3			*	*	*	*

* Indicates stock available.

17. MAINTENANCE PARTS LIST FOR TELEPHONE TP-9 (contd).

Ref symbol	Signal Corps stock No.	Name of part and description	Quan per unit	Running spares	Orgn stock	3d ech	4th ech	5th ech	Depot stock
T3	2Z9631.219	TRANSFORMER, AF: input; pri 300 ohms, secd 250,000 ohms impedance; shielded steel shell; 1 5/16″ h x 1 3/16″ sq over-all; Fed Tele & Rad W15-57, dwg WTA71557; (turns ratio of pri to secd 27.4; freq response 200 to 10,000 cyc ± 1.3 db; 5 soldering lugs; two 0.189″ diam mtg holes on 1.606″ centers; vacuum-impregnated); (receiving amplifier).	1					*	*
T1	2Z9631.218	TRANSFORMER, AF: input; pri 1,255 ohms, secd 760 ohms impedance; shielded steel shell; 1 5/16″ h x 1 3/16″ sq over-all; Fed Tele & Rad W15-55, dwg WTA71555; (turns ratio winding 2-3 to 1-2, 3.84; winding 2-3 to 3-4, 3.95; winding 2-3 to 1-4, 7.80; freq response 200 to 10,000 cyc ± 1.0 db; 4 soldering lugs; two 0.189″ diam mtg holes on 1.606″ centers; vacuum-impregnated); (induction coil).	1					*	*

* Indicates stock available.

17. MAINTENANCE PARTS LIST FOR TELEPHONE TP-9 (contd).

Ref symbol	Signal Corps stock No.	Name of part and description	Quan per unit	Running spares	Orgn stock	3d ech	4th ech	5th ech	Depot stock
T2	2Z9632.309	TRANSFORMER, AF: output; pri 12,950 ohms, secd 300 ohms impedance; shielded steel shell; 1 5/16″ h x 1 3/16″ sq over-all; Fed Tele & Rad W15-56, dwg WTA71556; (turns ratio of pri to secd 6.57; freq response 200 to 10,000 cyc ± 1.0 db; 5 soldering lugs; two 0.189″ diam mtg holes on 1.606″ centers; vacuum-impregnated); (transmitting amplifier).	1					*	*
T4	2Z9632.308	TRANSFORMER, AF: output; pri 40,300 ohms, secd 200 ohms impedance; shielded steel shell; 1 5/16″ h x 1 3/16″ sq over-all; Fed Tele & Rad W15-58, dwg WTA71558; (turns ratio of pri to secd 14.1; freq response 200 to 10,000 cyc ± 1.5 db; 7 soldering lugs; two 0.189″ diam mtg holes on 1.606″ centers; vacuum-impregnated; potted with 2 capacitors); (receiving amplifier).	1					*	*
V1, V2, V3	2J3Q5GT	TUBE, electron: JAN-3Q5GT (VT-221); (amplification).	3	1	*	*	*	*	*

* Indicates stock available.

17. MAINTENANCE PARTS LIST FOR TELEPHONE TP-9 (contd).

Ref symbol	Signal Corps stock No.	Name of part and description	Quan per unit	Run-ning spares	Orgn stock	3d ech	4th ech	5th ech	Depot stock
	6L73614-1	WASHER, curved: #25 ga phosphor bronze (flatwire) spring temper, burrs removed and cleaned; 9/32″ ID x 1/2″ OD, 0.017″ thk, curved approx 1/2″ radius, arc d 1/16″; Fed Tele & Rad W55-35, dwg WTA 2526; (lever latch).	2			*	*	*	*
	3G1790-7.1	WASHER, flat: Buna-S rubber; 0.170″ ID, 7/16″ OD, 1/16″ thk; Fed Tele & Rad W40-3, dwg WTA2558; (indicator magnet coil).	2			*	*	*	*
	3G1790-10.1	WASHER, flat: Buna-S soft rubber; 3/8″ ID, 5/8″ OD, 1/16″ thk; Fed Tele & Rad W40-2, dwg WTA2549; (switch gland).	3				*	*	*
	3G1838-7.5	WASHER, flat: linen base bakelite; 0.218″ ID, 9/16″ OD, 1/16″ thk; Fed Tele & Rad W55-34, dwg WTA2521; (jack spacer and binding posts).	5			*	*	*	*
	3G1790-7.2	WASHER, flat: yellow gum rubber; 3/16″ ID, 7/16″ OD, 3/16″ thk; Fed Tele & Rad W40-3, dwg WTA2558; (indicator magnet coil and jack terminal).	5			*	*	*	*

* ndicates stock available.

17. MAINTENANCE PARTS LIST FOR TELEPHONE TP-9 (contd).

Ref symbol	Signal Corps stock No.	Name of part and description	Quan per unit	Running spares	Orgn stock	3d ech	4th ech	5th ech	Depot stock
		PART II Dry batteries shown are used with the equipment but are not part of it. They will not be automatically preshipped (except for new equipments) but are to be requisitioned in quantities necessary for the particular organization and/or theatre. Stocks are limited to 3 months supply (Office of the Chief Signal Officer, Serial # 56, dated 14 April 1944).							
BA-2	3A2	BATTERY, dry: Sig C Battery BA-2; 22½ v; rectangular; 3 7/16" lg x 2 1/32" wd x 2 19/32" h over-all; Eveready # 763 or equal; (screen and plate).	3		*	*	*	*	*
BA-27	3A27	BATTERY, dry: Sig C Battery BA-27; 4½ v, tapped at 3 v and 1½ v; rectangular; 4" lg x 1 7/16" wd x 3 1/16" h over-all; Eveready # 714 or equal; (control).	1		*	*	*	*	*

* Indicates stock available.

17. MAINTENANCE PARTS LIST FOR TELEPHONE TP-9 (contd).

Ref symbol	Signal Corps stock No.	Name of part and description	Quan per unit	Run-ning spares	Orgn stock	3d ech	4th ech	5th ech	Depot stock
BA-65	3A65	BATTERY, dry: Sig C Battery BA-65; 1½ v; square; 2 9/16" x 2 9/16" x 4" h over-all: Eveready #742 or equal; (filament).	1		*	*	*	*	*
		REPAIR PARTS OF COMPONENTS							
		In addition to the foregoing, items shown in the following lists are necessary for higher echelon maintenance of Telephone TP-9.							
		GENERATOR GN-38							
	4B838/A5	ARMATURE ASSEMBLY.					*	*	*
	4B838/S1	CRANKSHAFT AND CAM ASSEMBLY: shaft with driving cam and buffer.					*	*	*
	4B838/G1	GEAR, large: 99-tooth.					*	*	*
	4B838/G2	GEAR, pinion: 21-tooth.					*	*	*

* Indicates stock available.

17. MAINTENANCE PARTS LIST FOR TELEPHONE TP-9 (contd).

Ref symbol	Signal Corps stock No.	Name of part and description	Quan per unit	Running spares	Orgn stock	3d ech	4th ech	5th ech	Depot stock
	4B838/P1	PIN: for pinion gear.					*	*	*
	4B838/S3	SPRING: steel wire (cam operating).					*	*	*
	4B838/S2	SPRING ASSEMBLY, contact.					*	*	*
		Miscellaneous Hardware							
	6L6632-8.5	SCREW, machine: RH, #6-32 x ½"; (generator contact spring assembly mounting)					*	*	*
	6L6832-6.5A	SCREW, machine: RH; #8-32 x ⅜"; (generator assembly).					*	*	*
	6L6832-6.7A	SCREW, machine: FH; #8-32 x ⅜"; (generator assembly).					*	*	*
	6L7932-2, 31S	SCREW, set: headless; steel; #8-32 x ⅛"; cup point; (crank shaft collar locking).					*	*	*
	6L73006	WASHER, lock: steel; std for #6 screw; (generator contact spring assembly mounting).					*	*	*

* Indicates stock available.

17. MAINTENANCE PARTS LIST FOR TELEPHONE TP-9 (contd).

Ref symbol	Signal Corps stock No.	Name of part and description	Quan per unit	Running spares	Orgn stock	3d ech	4th ech	5th ech	Depot stock
	6L730086	WASHER, lock: steel; std for # 8 screw; (generator assembly).					*	*	*
		HANDSET TS-9-A (Auto Elec)							
	4B1109A/20	CAP, receiver.					*	*	*
	4B1109A/50/1	CONTACT ASSEMBLY: transmitter.					*	*	*
	3E333	CORD: CC-333.					*	*	*
	4B1109A/24	HANDLE, handset.					*	*	*
	4B1109A/50/2	MOUTHPIECE: transmitter.					*	*	*
	4B1109A/1	RECEIVER, handset.					*	*	*
	4B418/32	RING, clamping: (mouthpiece, transmitter).					*	*	*
	4B1109A/6	RING, clamping: (receiver).					*	*	*

* Indicates stock available.

17. MAINTENANCE PARTS LIST FOR TELEPHONE TP-9 (contd).

Ref symbol	Signal Corps stock No.	Name of part and description	Quan per unit	Running spares	Orgn stock	3d ech	4th ech	5th ech	Depot stock
	3Z9650	SWITCH ASSEMBLY ("Push to Talk").					*	*	*
	4B1109J/3	TRANSMITTER, handset.					*	*	*
		Miscellaneous Hardware							
	6L6348-4S	SCREW, machine: FH: #3-48 x 1/4"; (secures clamping plate to receiver cap).					*	*	*
	6L6440-3.59	SCREW, machine: FH; #4-40 x 3/16"; (secures switch to handle).					*	*	*
	6L6540-3.8	SCREW, machine; Bind H; #5-40 x 3/16"; (connects Terminals TM-165 in handle).					*	*	*
	4B1109A/3	SCREW: stay cord (secures cord in handle).					*	*	*
		HANDSET TS-9-C, H, Q, W (St Carl)							
	4B1109H/20	CAP, receiver.					*	*	*

* Indicates stock available.

17. MAINTENANCE PARTS LIST FOR TELEPHONE TP-9 (contd).

Ref symbol	Signal Corps stock No.	Name of part and description	Quan per unit	Running spares	Orgn stock	3d ech	4th ech	5th ech	Depot stock
	3E333	CORD: CC-333.					*	*	*
	4B1109H/24	HANDLE, handset.					*	*	*
	4B1109H/5	MOUTHPIECE: transmitter.					*	*	*
	4B1109C/1	RECEIVER, handset.					*	*	*
	4B1109H/6	RING, clamping: (receiver).					*	*	*
	4B1109H/5/3	RING, clamping: (transmitter).					*	*	*
	4B1109H/12	SPRING, contact: (center, receiver).					*	*	*
	4B1109H/13	SPRING, contact: (outer, receiver).					*	*	*
	4B1109H/14	SPRING, contact: (center, transmitter).					*	*	*
	4B1109H/15	SPRING, contact: (outer, transmitter).					*	*	*
	3Z9650	SWITCH ASSEMBLY ("Push to Talk").					*	*	*

* Indicates stock available.

17. MAINTENANCE PARTS LIST FOR TELEPHONE TP-9 (contd).

Ref symbol	Signal Corps stock No.	Name of part and description	Quan per unit	Running spares	Orgn stock	3d ech	4th ech	5th ech	Depot stock
	4B1109C/3	TRANSMITTER, handset.					*	*	*
		Miscellaneous Hardware							
	6L6440-3.59	SCREW, machine: FH; #4-40 x 3/16"; (secures switch to handle).					*	*	*
	6L6448-3.20	SCREW, machine: Fil Bind H; #4-48 x 3/16"; (connects Terminals TM-163 in handle).					*	*	*
		HANDSET TS-9-E, N, O, U, AA, AC (Contelco)							
	4B1109E/20	CAP, receiver.					*	*	*
	3E333	CORD: CC-333.					*	*	*
	4B1109E/32	HANDLE, handset.					*	*	*
	4B1109E/5/1	MOUTHPIECE: transmitter.					*	*	*
	4B1109E/1	RECEIVER, handset.					*	*	*

* Indicates stock available.

17. MAINTENANCE PARTS LIST FOR TELEPHONE TP-9 (contd).

Ref symbol	Signal Corps stock No.	Name of part and description	Quan per unit	Running spares	Orgn stock	3d ech	4th ech	5th ech	Depot stock
	4B1109E/5/3	RING, clamping: (transmitter).					*	*	*
	4B1109E/5/2	SCREEN: transmitter.					*	*	*
	4B1109E/24	SPRING, contact: (center, receiver).					*	*	*
	4B1109E/25	SPRING, contact: (outer, receiver).					*	*	*
	4B1109E/26	SPRING, contact: (center, transmitter).					*	*	*
	4B1109E/23	SPRING, contact: (outer, transmitter).					*	*	*
	3Z9650	SWITCH ASSEMBLY ("Push to Talk").					*	*	*
	4B1109E/3	TRANSMITTER, handset.					*	*	*
		Miscellaneous Hardware							
	6L6440-3.59	SCREW, machine: FH; #4-40 x 3/16"; (secures switch to handle).					*	*	*

* Indicates stock available.

17. MAINTENANCE PARTS LIST FOR TELEPHONE TP-9 (contd).

Ref symbol	Signal Corps stock No.	Name of part and description	Quan per unit	Run-ning spares	Orgn stock	3d ech	4th ech	5th ech	Depot stock
	6L6540-3.8	SCREW, machine: Bind H; # 5-40 x 3/16"; (connects Terminals TM-163 in handle).					*	*	*
		HANDSET TS-9-F (WECo)							
	4B1109F/20	CAP, receiver.					*	*	*
	4B1109F/19	CAP, transmitter.					*	*	*
	3E333	CORD: CC-333.					*	*	*
	4B1109F/24	HANDLE, handset.					*	*	*
	4B1109F/1	RECEIVER, handset.					*	*	*
	4B1109F/12	SPRING, contact: (center, receiver).					*	*	*
	4B1109F/13	SPRING, contact: (outer, receiver).					*	*	*
	4B1109F/14	SPRING, contact: (center, transmitter).					*	*	*

* Indicates stock available.

17. MAINTENANCE PARTS LIST FOR TELEPHONE TP-9 (contd).

Ref symbol	Signal Corps stock No.	Name of part and description	Quan per unit	Running spares	Orgn stock	3d ech	4th ech	5th ech	Depot stock
	4B1109F/15	SPRING, contact: (outer, transmitter).					*	*	*
	3Z9650	SWITCH ASSEMBLY ("Push to Talk").					*	*	*
	4B1109F/3	TRANSMITTER, handset.					*	*	*
		Miscellaneous Hardware							
	6L6540-3.10	SCREW, machine: F Fil H; # 5-40 x 3/16"; (connects Terminals TM-163 in handle).					*	*	*
	6L6440-3.59	SCREW, machine: FH; # 4-40 x 3/16"; (secures switch to handle).					*	*	*
		HANDSET TS-9-G, L, T, V, AE, AJ (Holtzer)							
	4B1109G/20	CAP, receiver.					*	*	*
	4B1109G/19	CAP, transmitter.					*	*	*
	3E333	CORD: CC-333.					*	*	*

* Indicates stock available.

17. MAINTENANCE PARTS LIST FOR TELEPHONE TP-9 (contd).

Ref symbol	Signal Corps stock No.	Name of part and description	Quan per unit	Running spares	Orgn stock	3d ech	4th ech	5th ech	Depot stock
	4B1109G/24	HANDLE, handset.					*	*	*
	4B1109G/1	RECEIVER, handset.					*	*	*
	4B1109G/25	SPRING, contact: (center, receiver).					*	*	*
	4B1109G/29	SPRING, contact: (outer, receiver).					*	*	*
	4B1109G/26	SPRING, contact: (center, transmitter).					*	*	*
	4B1109G/30	SPRING, contact: (outer, transmitter).					*	*	*
	3Z9650	SWITCH ASSEMBLY ("Push to Talk").					*	*	*
	4B1109G/3	TRANSMITTER, handset.					*	*	*
		Miscellaneous Hardware							
	4B1109G/31	SCREW, machine: special; terminal; brass; #6-40 x 3/16"; (connects cords in handle).					*	*	*

* Indicates stock available.

17. MAINTENANCE PARTS LIST FOR TELEPHONE TP-9 (contd).

Ref symbol	Signal Corps stock No.	Name of part and description	Quan per unit	Running spares	Orgn stock	3d ech	4th ech	5th ech	Depot stock
	6L6440-3.59	SCREW, machine: FH; #4-40 x 3/16"; (secures switch to handle).					*	*	*
		HANDSET TS-9-J (Auto Elec)							
	4B1109J/20	CAP, receiver.					*	*	*
	4B1109J/19	CAP, transmitter.					*	*	*
	3E333	CORD: CC-333.					*	*	*
	4B1109J/24	HANDLE, handset.					*	*	*
	4B1109J/1	RECEIVER, handset.					*	*	*
	4B1109J/12	SPRING, contact: (center, receiver).					*	*	*
	4B1109J/13	SPRING, contact: (outer, receiver).					*	*	*
	4B1109J/14	SPRING, contact: (center, transmitter).					*	*	*

* Indicates stock available.

17. MAINTENANCE PARTS LIST FOR TELEPHONE TP-9 (contd).

Ref symbol	Signal Corps stock No.	Name of part and description	Quan per unit	Running spares	Orgn stock	3d ech	4th ech	5th ech	Depot stock
	4B1109J/15	SPRING, contact; (outer, transmitter).					*	*	*
	3Z9650	SWITCH ASSEMBLY ("Push to Talk").					*	*	*
	4B1109J/3	TRANSMITTER, handset.					*	*	*
		Miscellaneous Hardware							
	6L6440-3.59	SCREW, machine: FH; #4-40 x 3/16"; (secures switch to handle).					*	*	*
	6L6540-3.8	SCREW, machine: Bind H; #5-40 x 3/16"; (connects cords in handle).					*	*	*
		HANDSET TS-9-K (Kellogg)							
	4B1109K/20	CAP, receiver.					*	*	*
	3E333	CORD: CC-333.					*	*	*
	4B1109K/24	HANDLE, handset.					*	*	*

* Indicates stock available.

17. MAINTENANCE PARTS LIST FOR TELEPHONE TP-9 (contd).

Ref symbol	Signal Corps stock No.	Name of part and description	Quan per unit	Running spares	Orgn stock	3d ech	4th ech	5th ech	Depot stock
	4B1109K/5	MOUTHPIECE: transmitter.					*	*	*
	4B1109K/1	RECEIVER, handset.					*	*	*
	4B1109K/7	RING, clamping: (transmitter).					*	*	*
	3Z9650	SWITCH ASSEMBLY ("Push to Talk").					*	*	*
	4B1109K/3	TRANSMITTER, handset.					*	*	*
		Miscellaneous Hardware							
	6L6440-3.59	SCREW, machine: FH; #4-40 x 3/16"; (secures switch to handle).					*	*	*
	6L6448-3.20	SCREW, machine: Bind H; #4-48 x 3/16"; (connects cords in handle).					*	*	*
	4B1109K/34	FASTENER: stay cord.					*	*	*

* Indicates stock available.

17. MAINTENANCE PARTS LIST FOR TELEPHONE TP-9 (contd).

Ref symbol	Signal Corps stock No.	Name of part and description	Quan per unit	Running spares	Orgn stock	3d ech	4th ech	5th ech	Depot stock
		HANDSET TS-9-R, AF, AL (Fed Tele & Rad)							
	4B1109R/37	BOARD, terminal: (transmitter contact mounting and cord terminating).					*	*	*
	4B1109A.11/20	CAP, receiver.					*	*	*
	4B1109A.11/12	SPRING, contact: (center, receiver).							
	4B1109E/1	RECEIVER, handset. (if equipped with Contelco receiver unit.)							
	4B1109A.6/20	CAP, receiver.					*	*	*
	4B1109R/12	SPRING, contact: (center, receiver).					*	*	*
	4B1109F/1	RECEIVER, handset. (if equipped with WECo receiver unit.)							
	4B1109A.6/19	CAP, transmitter.					*	*	*

* Indicates stock available.

17. MAINTENANCE PARTS LIST FOR TELEPHONE TP-9 (contd).

Ref symbol	Signal Corps stock No.	Name of part and description	Quan per unit	Running spares	Orgn stock	3d ech	4th ech	5th ech	Depot stock
	3E333	CORD: CC-333.					*	*	*
	4B1109R/24	HANDLE, handset.					*	*	*
	4B1109A.6/13	SPRING, contact: (outer, receiver).					*	*	*
	4B1109R/14	SPRING, contact: (center, transmitter).					*	*	*
	4B1109A.6/15	SPRING, contact: (outer, transmitter).					*	*	*
	3Z9650	SWITCH ASSEMBLY ("Push to Talk").					*	*	*
	4B1109E/3	TRANSMITTER, handset: Contelco. (Either transmitter unit can be used.)					*	*	*
	4B1109F/3	TRANSMITTER, handset: WECo. (Either transmitter unit can be used.)					*	*	*

* Indicates stock available.

17. MAINTENANCE PARTS LIST FOR TELEPHONE TP-9 (contd).

Ref symbol	Signal Corps stock No.	Name of part and description	Quan per unit	Running spares	Orgn stock	3d ech	4th ech	5th ech	Depot stock
		Miscellaneous Hardware							
	6L6440-3.59	SCREW, machine: FH; #4-40 x 3/16"; (secures switch to handle).					*	*	*
	6L6448-3.5	SCREW, machine: RH; #4-48 x 3/16"; (receiver contact mounting).					*	*	*
	6L6440-3.5	SCREW, machine: RH; #4-40 x 3/16"; (connects cords to handle).					*	*	*
	6L7932-10.49S	SCREW, self tapping: cadmium-plated; #6-32 x 5/8"; (terminal block mounting and stay cord fastening).					*	*	*

* Indicates stock available.

18. VACUUM TUBE SOCKET WIRING DIAGRAM.

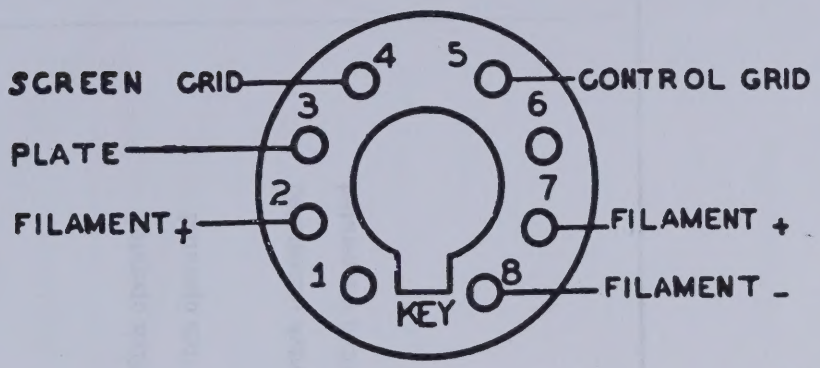

TABLE OF EXTERNAL CONNECTIONS

	V 1	V 2	V 3
TERM 1			
2	7 ON V1		
3	2 ON K1	4 ON K1 AND C4	3 ON T4
4	3 ON K1	R10 AND C2	R9 AND C3
5	C1 AND R7	R8	C4 AND R11
6			
7	7 ON V2	7 ON V3	2 ON BAT. TERM BOARD THRU 12 ON CHASSIS T. B.
8	12 ON S1 4 ON T3 AND GROUND	12 ON S1 4 ON T3 AND GROUND	12 ON S1 4 ON T3 AND GROUND

TL 53152-S

GRID
PLATE
FILAMENT +
FILAMENT -
KEY

19. POINT TO POINT VOLTAGES.

From Term	On Part	To Term	On Part	SW	Pos.	Remarks	Voltage
3	V1	Gnd	Chassis	S1	Open	Handset butterfly switch unoperated	65
3	V1	Gnd	Chassis	S1	Open	Handset butterfly switch operated	67
4	V1	Gnd	Chassis	S1	Open		67
6	T1	7	V1	S1	Open		2.2
2	V1	Gnd	Chassis	S1	Open		1.5
2	T1	3	T1			Handset butterfly switch operated	.1
2	Cross	C6	Capacitor			Handset butterfly switch operated	2.4
Gnd	Chassis	7	V2	S1	Open	Gain control full off	1.5
3	V2	Gnd	Chassis	S1	Open	Handset butterfly switch unoperated	50
4	V2	Gnd	Chassis	S1	Open	Handset butterfly switch unoperated	7
7	V2	8	V2	S1	Open		1.32
Gnd	Chassis	7	V3	S1	Open		1.5
3	V3	Gnd	Chassis	S1	Open		40
4	V3	Gnd	Chassis	S1	Open		9
7	V3	8	V3	S1	Open		1.32

20. POINT TO POINT RESISTANCE VALUES.

From Term	On Part	To Term	On Part	SW	Pos.	Remarks	Ohms
Binding Post	Panel	Binding Post	Panel	S1 S2	Closed Sig.		1300
Binding Post	Panel	Binding Post	Panel	S1 S2	Closed Bell		1300
4	T2	3	T2	S1	Closed		40
3	V1	4	V1			Armature of Relay K1 in non-operate position	0
3	V1	4	V1			Armature of Relay K1 in operate position	1250
8	V1	Gnd	Chassis				0
5	V1	Gnd	Chassis	S1	Open		57000
5	T1	6	T1				22
1	T1	2	T1	S1	Open		24
2	T1	3	T1			Handset Butterfly Switch non-operated	2.5
3	T1	4	T1				22.5

20. POINT TO POINT RESISTANCE VALUES (contd.)

From Term	On Part	To Term	On Part	SW	Pos.	Remarks	Ohms
1	T3	2	T3				33
5	V2	Gnd	Chassis			Gain control full on Disconnect all wires on Term 3 of T3	400000
5	V2	Gnd	Chassis			Gain control full off Disconnect all wires on Term 3 of T3	150000
3	T3	4	T3			Disconnect all wires on Term 3 of T3	1790
7	V1	7	V2				0
7	V2	7	V3				0
8	V2	Gnd	Chassis				4
4	V2	4	V3				740000
3	V2	2	L1			Armature of Relay K1 in unoperated position	22000
1	L1	2	L1			Armature of Relay K1 in unoperated position	820
3	V2	1	L1			Armature of Relay K1 in operated position	0
5	V3	Gnd	Chassis				470000
3	V3	1	T4				1580
8	V3	Gnd	Chassis				4
4	T4	5	T4	S1	Open		55
1	K1	5	K1				50

21. RESISTOR COLOR CODE.

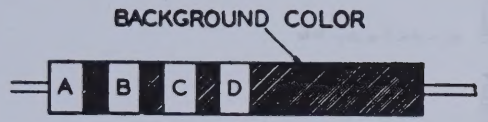

METHOD I

COLOR BANDS A, B, AND C GIVE VALUE.
GOLD OR SILVER BAND D, USUALLY OMITTED, INDICATES TOLERANCE
BLACK BACKGROUND - UNINSULATED.
TAN BACKGROUND - INSULATED

METHOD II

BODY COLOR (A), END COLOR (B), AND DOT OR BAND COLOR (C) GIVE VALUE.
GOLD OR SILVER BAND D, USUALLY OMITTED, INDICATES TOLERANCE.

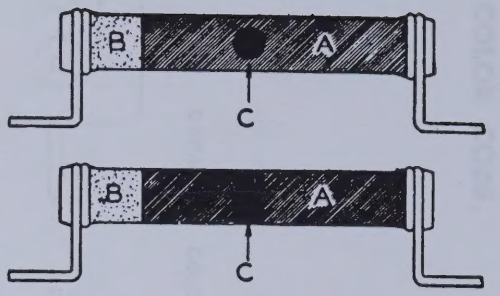

COLOR	FIGURE
BLACK	0
BROWN	1
RED	2
ORANGE	3
YELLOW	4
GREEN	5
BLUE	6
VIOLET	7
GRAY	8
WHITE	9

COLOR A GIVES FIRST FIGURE OF RESISTOR VALUE.

COLOR B GIVES SECOND FIGURE OF RESISTOR VALUE.

COLOR C GIVES NUMBER OF CIPHERS FOLLOWING THE FIRST TWO FIGURES.

COLOR D: GOLD BAND INDICATES ±5% TOLERANCE.
SILVER BAND INDICATES ±10% TOLERANCE.
NO BAND INDICATES STANDARD ±20% TOLERANCE.

EXAMPLES

RESISTANCE OHMS	COLOR CODE			
	A	B	C	D
43000 ±5%	YELLOW	ORANGE	ORANGE	GOLD
3900 ±10%	ORANGE	WHITE	RED	SILVER
68 ±20%	BLUE	GRAY	BLACK	NONE

TL53153-S

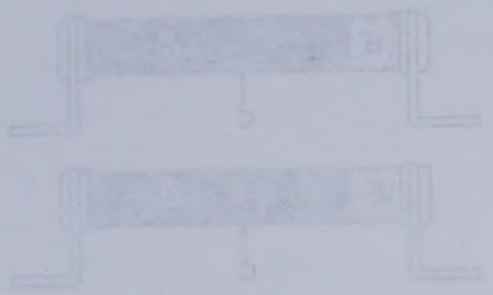

22. CAPACITOR COLOR CODE.

CAPACITOR COLOR CODE

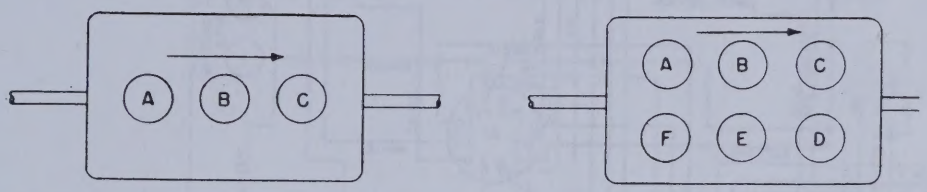

ONE ROW DOTS	COLOR	TWO ROWS OF DOTS
DOT A	INDICATES FIRST SIGNIFICANT FIGURE OF CAPACITANCE VALUE IN MICROMICROFARADS	DOT A
DOT B	INDICATES SECOND SIGNIFICANT FIGURE	DOT B
	INDICATES THIRD SIGNIFICANT FIGURE	DOT C
DOT C	INDICATES MULTIPLIER	DOT D
USUAL TOLERANCE ±20%	INDICATES TOLERANCE IN PER CENT OF THE NOMINAL CAPACITANCE VALUE. IF NO COLOR APPEARS TOLERANCE IS 20%	DOT E
RATED VOLTAGE USUALLY 500 VOLTS	INDICATES THE RATED VOLTAGE	DOT F

COLOR	SIGNIFICANT FIGURE	MULTIPLIER	TOLERANCE PER CENT (IF GIVEN)	RATED VOLT. (IF GIVEN)
BLACK	0	1		
BROWN	1	10	1	100
RED	2	100	2	200
ORANGE	3	1000	3	300
YELLOW	4	10,000	4	400
GREEN	5	100,000	5	500
BLUE	6	1,000,000	6	600
VIOLET	7	10,000,000	7	700
GRAY	8	100,000,000	8	800
WHITE	9	1,000,000,000	9	900
GOLD		0.1	5	1,000
SILVER		0.01	10	2,000
NO COLOR			20	500

TL 35619

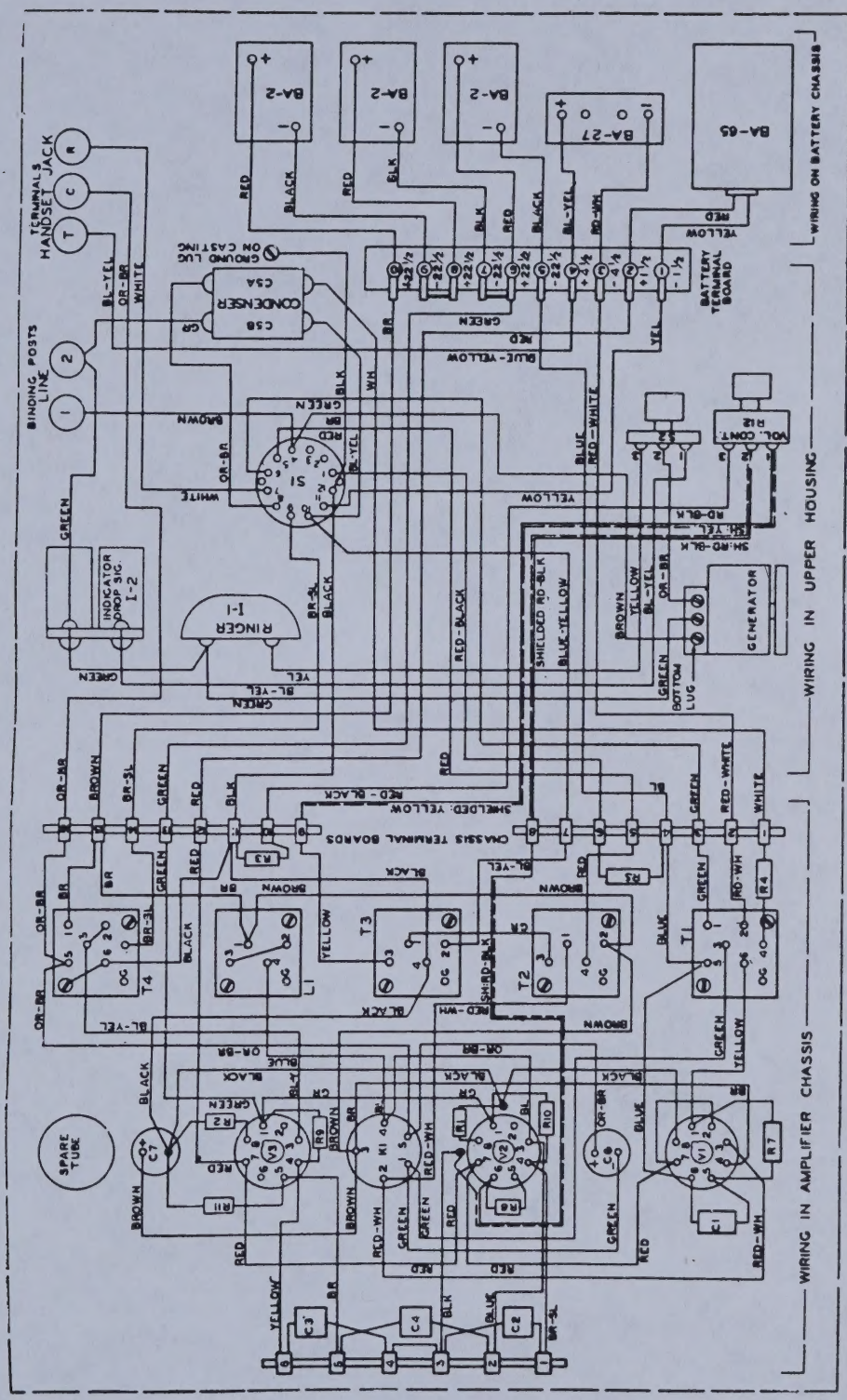

TL 52333

Figure 12. Wiring diagram.

☆U. S. GOVERNMENT PRINTING OFFICE : O—1951